Western Australia

Road Traffic (Vehicles) Regulations 2014

Compare between:

[04 Sep 2026, 01-au0-00] and [02 Oct 2026, 01-av0-00]

Road Traffic (Vehicles) Regulations 2014

Part 1 — Preliminary

1. Citation

These regulations are the *Road Traffic (Vehicles) Regulations 2014*.

2. Commencement

These regulations come into operation on the day fixed under the *Road Traffic (Administration) Act 2008* section 2(b).

3. Terms used

In these regulations, unless the contrary intention appears —

agricultural combination means a combination that includes at least one agricultural vehicle;

agricultural implement means a vehicle without its own motive power, built to perform agricultural tasks;

agricultural machine means a machine with its own motive power, built to perform agricultural tasks;

agricultural vehicle means an agricultural implement or agricultural machine;

Airservices Australia means the body established by the *Air Services Act 1995* (Commonwealth) section 7(1);

Airservices Australia vehicle means a vehicle driven by any of the following persons in the course of the person's duty to Airservices Australia —

(a) the Chief Executive Officer appointed under the *Air Services Act 1995* (Commonwealth) section 34;

(b) a person appointed to act as the Chief Executive Officer under the *Air Services Act 1995* (Commonwealth) section 41;

(c) a person employed under the *Air Services Act 1995* (Commonwealth) section 42;

(d) a person engaged as a consultant under the *Air Services Act 1995* (Commonwealth) section 43;

air storage tank, of a vehicle, means a tank fitted to the vehicle for storing compressed air;

articulated bus means a bus with at least 2 rigid sections that allow passengers access between the sections and are connected to allow rotary movement between the sections;

Australian Border Force has the meaning given in the *Australian Border Force Act 2015* (Commonwealth) section 4(1);

Australian Border Force vehicle means a vehicle driven by an Immigration and Border Protection worker in the course of the worker's duty to the Australian Border Force;

Australian Design Rule (ADR) has the meaning given in regulation 226;

Australian Standard (AS) means a standard approved for publication on behalf of Standards Australia;

B-double means a combination consisting of a prime mover towing 2 semi-trailers;

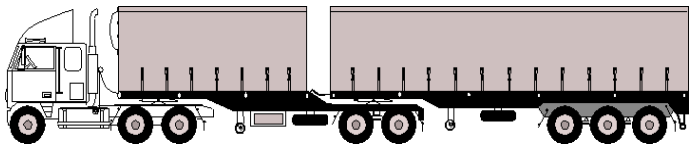

B-double

bicycle has the meaning given in the *Road Traffic Code 2000* regulation 3(1);

bus means a motor vehicle built mainly to carry people that seats more than 9 adults (including the driver);

car means a motor vehicle built mainly to carry people that —

(a) seats not more than 9 adults (including the driver); and

(b) has a body commonly known as a sedan, station wagon, utility, coupe, convertible or roadster; and

(c) has 4 or more wheels;

car or bus means a motor vehicle, other than a motor cycle, or a motorised wheelchair, built mainly to carry people and includes the type of vehicle known as a utility;

centre line, of an axle, means —

(a) for an axle consisting of 1 shaft — a line parallel to the length of the axle and passing through the centre of the axle; or

(b) for an axle consisting of 2 shafts — a line in the vertical plane passing through —

(i) the centres of both shafts; and

(ii) the centres of the wheels on the shafts;

centre line, of an axle group, means —

(a) if the group consists of 2 axles, one of which is fitted with twice the number of tyres as the other axle — a vertical line located one-third of the way from the centre line of the axle with more tyres towards the centre line of the axle with fewer tyres; and

(b) in any other case — a line located midway between the centre lines of the outermost axles of the group;

certificate of inspection means a certificate of inspection issued under regulation 18;

character includes letter and numeral;

combination means a group of vehicles consisting of a motor vehicle connected to one or more vehicles;

compliance plate, in relation to a vehicle, means a plate that —

(a) is approved by the Australian Motor Vehicle Certification Board; and

(b) relates to the vehicle; and

(c) indicates that the vehicle complies with each ADR applicable to vehicles of that make, model and year of manufacture;

controlled access bus means a bus, except an articulated bus, over 12.5 m long;

converter dolly means a trailer with one axle group or single axle, and a fifth wheel coupling, designed to convert a semi-trailer into a dog trailer;

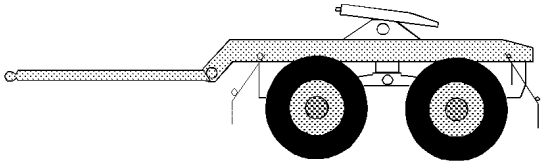

Converter dolly

dangerous goods has the meaning given the *Dangerous Goods Safety Act 2004* section 3(1);

daytime means the period from sunrise to sunset;

defect notice means a notice mentioned in section 71(1);

diesel engine means an engine that works on the compression-ignition principle;

dog trailer means a trailer (including a trailer consisting of a semi-trailer and converter dolly) with —

(a) one axle group or single axle at the front that is steered by connection to the towing vehicle by a drawbar; and

(b) one axle group or single axle at the rear;

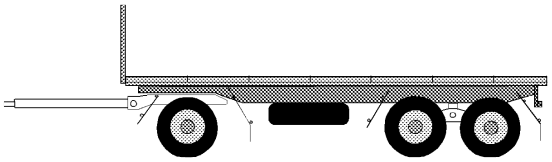

Dog trailer

drawbar means a part of a trailer (except a semi-trailer) connecting the trailer body to a coupling for towing purposes;

electric rideable device has the meaning given in the *Road Traffic Code 2000* regulation 3A;

engine identification number, for a vehicle, means the vehicle's engine identification number that is required under regulation 274(2);

escort vehicle means a motor vehicle that is being used —

(a) to transport a police officer or an authorised person as defined in the *Road Traffic Code 2000* regulation 3(1); and

(b) to warn other road users of the presence of an oversize vehicle;

fifth wheel coupling means a device, except the upper rotating element and the kingpin (which are parts of a semi-trailer), used with a prime mover, semi-trailer, or converter dolly, to allow quick coupling and uncoupling and to provide for articulation;

front fog light means a light used to improve the illumination of the road in case of fog, snowfall, heavy rain or a dust storm;

goods vehicle means a motor vehicle built or modified to be used primarily to carry goods or materials used in any trade, business or industry;

gross trailer mass (GTM) means the mass transmitted to the ground by the axles of a trailer when the trailer is loaded to its GVM and connected to a towing vehicle;

high-beam, for a headlight or front fog light fitted to a vehicle, means that the light is built or adjusted so that, when the vehicle is standing on level ground, the top of the main beam of light projected is above the low-beam position;

identifier means —

(a) in relation to a vehicle manufactured before 1 July 1988 —

(i) if the vehicle has an engine identification number or an individual chassis identification number — that number; or

(ii) if there is no such number — any number legibly and durably stamped on the vehicle by the vehicle's manufacturer;

(b) in relation to a vehicle manufactured after 30 June 1988 —

(i) if the vehicle has a VIN — that number; or

(ii) in any other case — any number legibly and durably stamped on the vehicle by the vehicle's manufacturer to identify the vehicle;

(c) if the CEO has, under a written law, allotted a number to replace a number mentioned in paragraph (a) or (b) — the replacement number;

(d) if a number mentioned in paragraph (a), (b) or (c) has been replaced under a corresponding law — the replacement number;

Immigration and Border Protection worker has the meaning given in the *Australian Border Force Act 2015* (Commonwealth) section 4(1);

inspection station has the meaning given in section 70;

left, for a vehicle, means to the left of the centre of the vehicle when viewed by a person in the vehicle who is facing to the front of the vehicle;

licence holder, in relation to a vehicle, means a person in whose name the vehicle is licensed;

load-sharing suspension system means an axle group suspension system that —

(a) is built to divide the load between the tyres on the group so that no tyre carries a mass over 10% more than the mass that it would carry if the load were divided equally; and

(b) has effective damping characteristics on all axles of the group;

loaded mass, of a vehicle, means the total mass of the vehicle and its load;

low-beam, for a headlight or front fog light fitted to a vehicle, means that the light is built or adjusted so that, when the vehicle is standing on level ground, the top of the main beam of light projected is —

(a) not higher than the centre of the headlight or fog light, when measured 8 m in front of the vehicle; and

(b) not more than 1 m higher than the level where the motor vehicle is standing, when measured 25 m in front of the vehicle;

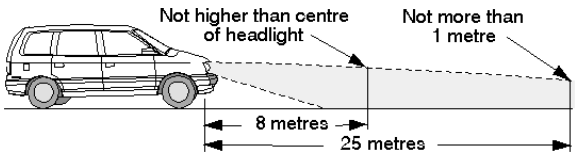

A headlight in the low-beam position

mass rating for charging (MRC), for a vehicle, means —

(a) the maximum permissible loaded mass of the vehicle as stated on the RAV for that vehicle; or

(b) if the maximum permissible loaded mass of the vehicle is not stated on the RAV — the mass recorded on the compliance plate as —

(i) the aggregate trailer mass; or

(ii) the gross trailer mass rating; or

(iii) the GVM;

or

(c) if the vehicle is not entered on the RAV and does not have a compliance plate — the maximum permissible loaded mass of the vehicle as determined by the CEO;

metropolitan region means the region described in the *Planning and Development Act 2005* Schedule 3;

moped means a motor cycle or motor tricycle that —

(a) is designed so as not to be capable of a speed exceeding 50 km/h; and

(b) either —

(i) has an engine capacity not exceeding 50 cm^3; or

(ii) is not powered by a piston engine;

motor cycle means a motor vehicle, other than a motorised wheelchair or a goods vehicle, that is not equipped with a permanent cab and cab roof and that —

(a) is designed to travel on 2 wheels, or, with a sidecar attached, 3 wheels; or

(b) has 3 wheels arranged so that the axis of rotation of 2 wheels lies on the same straight line and each of those 2 wheels is equidistant from the third;

motor home means a motor vehicle built for human habitation;

motorised scooter has the meaning given in the *Road Traffic Code 2000* regulation 3(1);

motorised wheelchair means a chair-type vehicle that —

(a) is fitted with 3 or more wheels; and

(b) is fitted and designed only for the use of persons with a physical disability;

motor tricycle means a motor vehicle with 3 wheels, but does not include a two-wheeled motor vehicle with a sidecar attached to it that is supported by a third wheel;

motor vehicle means a vehicle to be propelled by a motor that forms part of the vehicle;

mudguard means a fitting or device, with or without a mudflap, that is built and fitted to a vehicle in a way that will, as far as practicable, catch or deflect downwards any stone, mud, water or other substance thrown up by the rotation of the wheel to which the fitting or device is fitted;

nearer side of the vehicle, in relation to a light or reflector fitted to a vehicle, means the side of the vehicle that is closest to where the light or reflector is fitted;

omnibus has the meaning given in section 130;

operator, in relation to a vehicle, means a person who otherwise controls or directs the operations of the vehicle;

over-mass, in relation to a vehicle, means having a mass that exceeds an applicable mass requirement (whether or not the vehicle also has a dimension that exceeds an applicable dimension requirement);

oversize, in relation to a vehicle, means having a dimension that exceeds an applicable dimension requirement (whether or not the vehicle also has a mass that exceeds an applicable mass requirement);

parking brake, of a vehicle, means the brake usually used to keep the vehicle stationary while the vehicle is parked;

peak hours means 7.30 a.m. to 9.00 a.m. and 4.30 p.m. to 6.00 p.m. on a Monday, Tuesday, Wednesday, Thursday or Friday, other than a public holiday;

pig trailer means a trailer with one axle group or a single axle near the middle of its load-carrying surface, and connected to the towing vehicle by a drawbar;

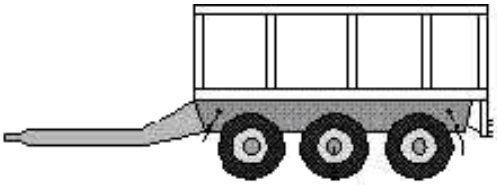

Pig trailer

pilot vehicle means a motor vehicle, other than an escort vehicle, being used to warn other road users of the presence of an oversize or over-mass vehicle;

point of articulation means —

(a) the axis of a kingpin for a fifth wheel; or

(b) the vertical axis of rotation of a fifth wheel coupling; or

(c) the vertical axis of rotation of a turntable assembly; or

(d) the vertical axis of rotation of the front axle group, or single axle, of a dog trailer; or

(e) the coupling pivot point of a semi-trailer;

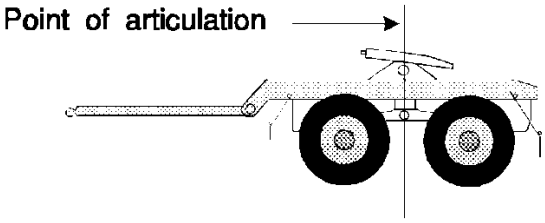

Point of articulation — fifth wheel coupling on a converter dolly (forming the front axle group of a dog trailer)

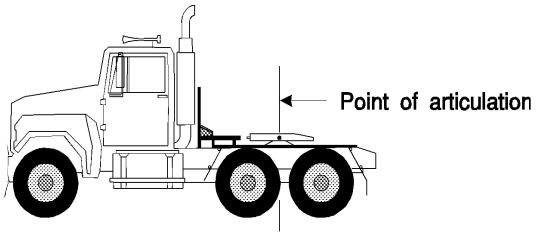

Point of articulation — fifth wheel on a prime mover

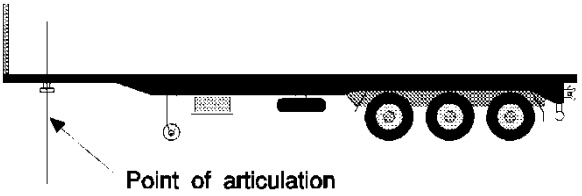

Point of articulation — kingpin for fifth wheel

pole-type trailer, except in Part 11 Division 1 means a trailer that —

(a) is attached to a towing vehicle by a pole, or an attachment fitted to the pole; and

(b) is ordinarily used for transporting loads, such as logs, pipes, structural members, or other long objects, that can generally support themselves like beams between supports;

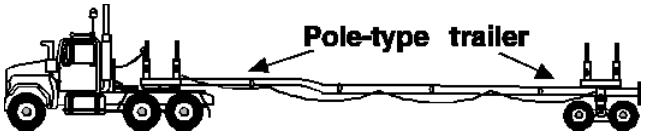

Pole-type trailer

prime mover means a motor vehicle built to tow a semi-trailer;

RAV means the Register of Approved Vehicles kept under the *Road Vehicle Standards Act 2018* (Commonwealth) section 14(1);

rear overhang, of a vehicle, means the distance between the rear overhang line and the rear of the vehicle;

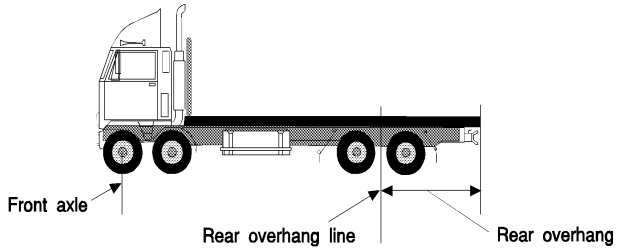

Rear overhang and rear overhang line

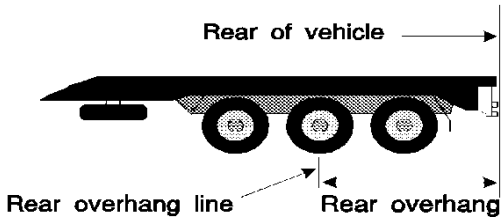

Rear overhang and rear overhang line — vehicle with tri-axle group at rear

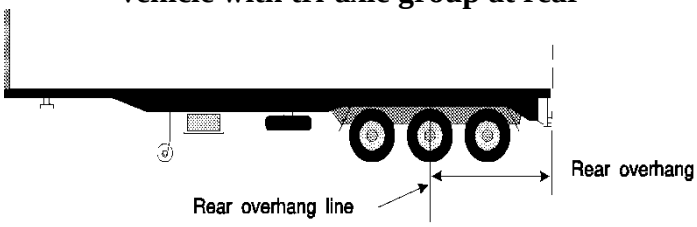

Rear overhang and rear overhang line — semi-trailer

repairable write-off, in relation to a vehicle, has the meaning given in regulation 151;

right, for a vehicle, means to the right of the centre of the vehicle when viewed by a person in the vehicle who is facing to the front of the vehicle;

road train means a combination, except a B-double, consisting of a motor vehicle towing at least 2 trailers (counting as a single trailer a converter dolly supporting a semi-trailer);

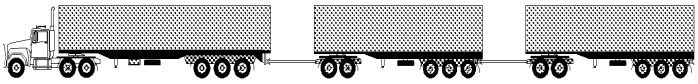

Road train

seasonal heavy vehicle licence means a heavy vehicle licence that is endorsed "seasonal" under regulation 40;

section means section of the Act;

semi-trailer means a trailer (including a pole-type trailer) that has —

(a) one axle group or single axle to the rear; and

(b) a means of attachment to a prime mover that results in some of the load being imposed on the prime mover;

service brake, for a vehicle, means the brake normally used to decelerate the vehicle;

set, in relation to number plates of any kind, means one or more plates each of which bears the same characters;

side marker light means a light fitted to the side of a vehicle indicating the presence and length of the vehicle when viewed on that side;

single axle means an axle not forming part of an axle group;

special purpose vehicle means a motor vehicle, other than a tow truck or an agricultural vehicle, built for a purpose other than carrying a load, except for water in the case of concrete pumps and fire trucks;

statutory write-off has the meaning given in regulation 150;

street rod vehicle means a vehicle that has been modified for safe road use and that —

(a) has a body and frame that were built before 1949; or

(b) is a replica of a vehicle the body and frame of which were built before 1949;

tow includes the following —

(a) to carry;

(b) to lift and tow;

(c) to lift and carry;

(d) to lift for the purpose of towing;

tow truck means —

(a) a motor vehicle that is —

(i) equipped with a crane, winch, ramp or other lifting or loading device; and

(ii) used or intended to be used for the towing or salvaging of a ~~motor~~ vehicle;

or

(b) a combination consisting of a prime mover towing a semi-trailer that is —

(i) equipped with a crane, winch, ramp or other lifting or loading device; and

(ii) used or intended to be used for the towing or salvaging of a ~~motor~~ vehicle~~.~~;

trailer means a vehicle without its own motive power that is built to be towed, or is towed, by a motor vehicle, but does not include a motor vehicle that is being towed;

turntable means a bearing built to carry vertical and horizontal loads, but does not allow quick separation of its upper and lower rotating elements, and that is used to connect and allow articulation between —

(a) a prime mover and semi-trailer; or

(b) the steering axle or axle group of a dog trailer and the body of the trailer; or

(c) a fifth wheel coupling and the vehicle to which it is mounted;

unloaded mass has the meaning given in the *Road Traffic (Administration) Act 2008* section 16(2);

vacuum storage tank, of a vehicle, means a tank fitted to the vehicle for storing air at low pressure;

vehicle identification number (VIN), for a vehicle, means the vehicle identification number that is required under regulation 274(4) for the vehicle;

Written-Off Vehicle Register (WOVR) means the register mentioned in regulation 156;

yellow includes amber.

[Regulation 3 amended: Gazette 15 Nov 2016 p. 5063; 29 Mar 2019 p. 962-4; SL 2021/37 r. 4; SL 2021/93 r. 9; SL 2021/81 r. 4; SL 2021/199 r. 8; SL 2022/149 r. 5; SL 2022/174 r. 4; SL 2026/204 r. 4.]

4. Use or driving of a vehicle relates to roads

A reference in these regulations to the driving or use of a vehicle is a reference to the driving or use of the vehicle on a road.

5. Measuring distances between parallel lines

Unless the contrary intention appears, a reference to a distance between 2 lines that are parallel is a reference to the distance measured at right angles between the lines.

6. Required equipment to be in working order

If a provision of these regulations requires a vehicle to have any kind of equipment, the provision must be taken to be not complied with if the equipment is not in working order.

7. Restored vehicles

For the purposes of these regulations a vehicle that is being, or has been, restored to its manufacturer's specifications, so far as it is practicable to meet the specifications, must be taken to have been built when it was originally built and not when it was restored.

8. Diagrams

(1) A diagram in these regulations is part of the regulations.

(2) If a diagram is referred to in a provision, the diagram has effect in accordance with the provision.

Note for this subregulation:

See regulations 362B(4)(d), 362C(4)(d) and 373(3)(a).

(3) A diagram is otherwise for illustrative purposes only and is not intended to represent the actual size, dimensions or colour of the thing shown.

[Regulation 8 amended: SL 2025/164 r. 4.]

9. Standards and requirements that do not apply to certain written-off vehicles

For the purposes of these regulations, a vehicle must be taken not to comply with the standards and requirements set out in Parts 8, 10 and 11 that apply to that kind of vehicle if —

(a) the vehicle is registered as a statutory write-off or a repairable write-off in the Written-Off Vehicle Register, and the registration has not been cancelled under regulation 158; or

(b) the vehicle's identifier is the same number as a number that is registered in the Written-Off Vehicle Register as the identifier of a vehicle to which paragraph (a) applies; or

(c) the vehicle is registered in the Written-Off Vehicle Register under regulation 158A, and the registration has not been cancelled under regulation 158B; or

(d) the vehicle's identifier is the same number as a number that is registered in the Written-Off Vehicle Register as the identifier of a vehicle to which paragraph (c) applies.

[Regulation 9 amended: SL 2022/16 r. 4.]

10. Freight containers

For the definition in section 3(1) of ***freight container***, a reusable container of the kind mentioned in Australian/New Zealand Standard AS/NZS 3711 *Freight Containers*, jointly published by Standards Australia and Standards New Zealand, that is designed for repeated use for the transport of goods by one or more modes of transport is prescribed.

11. Subsequent offences

(1) For the purposes of Parts 2, 3, 4 and 5 an offence under one of those Parts must be taken to be a subsequent offence if the person by whom it is committed had previously committed an offence —

(a) under a provision of any of those Parts; or

(b) under the repealed *Road Traffic (Licensing) Regulations 1975* as in effect at any time.

(2) For the purposes of Part 12 an offence under that Part must be taken to be a subsequent offence if the person by whom it is committed had previously committed an offence —

(a) under any provision of that Part; or

(b) under the repealed *Road Traffic (Tow Truck) Regulations 1975* as in effect at any time.

Part 2 — Licensing of vehicles

Division 1 — Preliminary

12. Terms used

In this Part —

heavy trailer means a trailer, other than a towed special purpose vehicle, with an MRC exceeding 4 500 kg;

heavy vehicle means —

(a) a vehicle with an MRC exceeding 4 500 kg that is an agricultural vehicle, a car or bus, a goods vehicle, a motor home, a prime mover or a special purpose vehicle; or

(b) a heavy trailer;

vehicle examiner has the meaning given in section 70.

13. Counting axles

For the purposes of this Part —

(a) 2 axles not more than 1 m apart must be taken to be one axle; and

(b) 3 axles, if the outside axles are not more than 2 m apart, must be taken to be 2 axles; and

(c) 4 axles, if the outside axles are not more than 3.2 m apart, must be taken to be 3 axles.

14. Notification and reconsideration of vehicle licensing decisions

Part 15 provides for the notification and reconsideration of certain decisions made under Part 2 of the Act.

Division 2 — Vehicle licences

15. Vehicles required to be licensed

(1) For section 4(1), a vehicle licence is required for a vehicle that is a motor vehicle or a trailer.

(2) However, a vehicle licence is not required for a motor vehicle or trailer that is —

(a) an agricultural implement being towed on a road by another vehicle in respect of which a licence or permit under section 13(1) has been granted and is current; or

(b) an unlicensed vehicle of any type being towed on a road by a tow truck in respect of which a licence or permit under section 13(1) has been granted and is current; or

(c) a motor vehicle that is designed so as not to be capable of a speed exceeding 10 km/h; or

(d) a vehicle declared as an electric personal transporter under the *Road Traffic Code 2000* regulation 230B; or

(e) a motorised scooter or electric rideable device.

[Regulation 15 amended: Gazette 24 Jun 2016 p. 2343; SL 2021/199 r. 9.]

16. Period within renewal period and after the expiry of vehicle licence in which offence under s. 4(2) not committed

For section 4(3)(b), the period after the expiry of the licence is 15 days.

17. Prescribed standards and requirements

For sections 5(3)(a), 9(1)(b) and 19 the standards and requirements for a vehicle are the standards and requirements set out in Parts 8, 10 and 11 that apply to that kind of vehicle.

18. Who can issue certificates of inspection

For the purposes of section 19(1) and regulation 24(2) only these persons may examine a vehicle and issue a certificate of inspection —

(a) a vehicle examiner;

(b) a police officer.

19. Certain vehicle examiners to display authorisation at inspection stations

A person authorised under paragraph (b) of the definition of ***vehicle examiner*** in section 70 by the CEO as a person to examine and test vehicles for the purposes of the Act must ensure that evidence of the authorisation is displayed at each inspection station at which the person examines vehicles in the person's capacity as a vehicle examiner.

20. Place of vehicle examination

(1) In this regulation —

vehicle examiner means a person authorised under paragraph (b) of the definition of ***vehicle examiner*** in section 70 by the CEO as a person to examine and test vehicles for the purposes of the Act.

(2) The authorisation of a vehicle examiner may specify a class of vehicle the examination of which may be undertaken at a place other than an inspection station.

(3) A certificate of inspection in relation to a vehicle examined by a vehicle examiner is of no effect unless —

(a) the examination of the vehicle is undertaken at an inspection station; or

(b) the vehicle is of a class specified under subregulation (2) in the authorisation of the vehicle examiner.

Division 3 — Grant, renewal, transfer and variation of vehicle licences

21. Minimum age for application for grant, transfer of vehicle licence

The minimum age at which an individual may apply for the grant or transfer of a vehicle licence for —

(a) a vehicle that is not a heavy vehicle is 16 years; or

(b) a heavy vehicle is 18 years.

22. Proof of age and identity of applicant for grant, transfer of vehicle licence

An application for the grant or transfer of a vehicle licence must be accompanied by proof of the applicant's age and identity that the CEO requires.

23. Proof of ownership

(1) The CEO may require an applicant for the grant or transfer of a vehicle licence to give the CEO, within the time specified by the CEO, proof of the ownership of the vehicle or any other document or information that the CEO requires to determine the application and may require the applicant to verify the information by statutory declaration.

(2) The CEO may refuse to consider an application if the applicant does not comply with a requirement under subregulation (1) within the specified time.

24. Examination for licensing purposes

(1) If an application for the grant, renewal or transfer of a vehicle licence is received and, under an order under section 19(1), the grant, renewal or transfer, as the case may be, of that licence is prohibited unless and until the vehicle has been examined and a certificate of inspection has been issued, the CEO must either —

(a) examine the vehicle; or

(b) require the applicant to produce to the CEO a certificate of inspection that was issued not more than 3 months before the date of the application.

(2) If an application for the grant or renewal of a vehicle licence is received and subregulation (1) does not apply, the CEO may, if the CEO thinks necessary —

(a) examine the vehicle; or

(b) require the applicant to cause the vehicle to be examined by a vehicle examiner or police officer,

and must not grant or renew the licence if the vehicle is not found to be a vehicle that may be licensed under regulation 34, 35 or 36.

*[**25.** Deleted: Gazette 18 Jun 2019 p. 2061.]*

26. Weighbridge record

An applicant for the grant or transfer of a vehicle licence must, if required by the CEO, provide evidence of a record of a kind mentioned in the *Road Traffic (Administration) Act 2008* section 112(2) in relation to the weight of —

(a) the unladen mass supported on the vehicle's front axle including the mass of the axle or any axle group; and

(b) the unladen mass supported on the vehicle's rear axle or axle group including the mass of the axle or any axle group.

27. Engine and vehicle identification numbers

(1) The CEO must not grant a licence for a vehicle —

(a) unless the vehicle has an engine identification number and there is compliance with regulation 274; or

(b) if the vehicle's engine identification number has been, or appears to have been altered, defaced, obliterated or removed.

(2) The CEO must not grant a licence for a motor vehicle, trailer or semi-trailer manufactured on or after 1 January 1989 —

(a) unless the vehicle has a VIN and there is compliance with regulation 274; or

(b) if the VIN has been, or appears to have been altered, defaced, obliterated or removed.

28. Form of licence

A licence document must be in a form approved by the CEO.

29. Grant of vehicle licence

(1) Except as provided in section 5 and subregulation (2), if an application is made for the grant of a licence —

(a) for a vehicle not previously licensed under the Act, the CEO must grant a licence for the vehicle to the applicant for a period mentioned in regulation 31; or

(b) for a vehicle for which the licence last granted or renewed under the Act expired before the period beginning 15 days before the day on which the application was made, the CEO must grant a licence for the vehicle to the applicant for a period mentioned in regulation 31.

(2) If —

(a) an application is made for the grant of a vehicle licence mentioned in subregulation (1)(b); and

(b) the application is made within the renewal period under regulation 30 in relation to the vehicle licence; and

(c) any number plate issued for the vehicle has not been returned to the CEO,

the CEO may refuse to grant the licence, in which case the application must be taken to be an application for a renewal of the licence last granted or renewed for that vehicle.

30. Renewal of vehicle licence

(1) In this regulation —

renewal period, in relation to a vehicle licence, means the period —

(a) beginning 3 months before the day on which the licence is to expire; and

(b) in the case of a licence except a seasonal heavy vehicle licence, ending 3 months after the day on which the licence expired; and

(c) in the case of a seasonal heavy vehicle licence, ending —

(i) 2 months after the day on which the licence expired; or

(ii) 11 months after the day on which the licence was granted,

whichever comes first.

(2) Except as provided in section 5, for section 6(2)(b), if an application for the renewal of a vehicle licence is made within the renewal period, the CEO must renew the licence for a period mentioned in regulation 31.

(3) If an application for the renewal of a vehicle licence is made before the renewal period, the CEO must refuse to renew the licence.

(4) If an application for the renewal of a vehicle licence is made after the renewal period, the CEO must refuse to renew the licence and the application must be taken to be an application for the grant of a licence for the vehicle.

(5) For the purposes of section 6(2)(c), a renewal of a vehicle licence within the period beginning 15 days after the day on which the licence expired continues the licence.

(6) For the purposes of section 6(2)(d), when a vehicle licence is renewed more than 15 days after the day on which the licence expired, the licence must be taken as having effect from the time the licence is renewed.

31. Period of grant or renewal of vehicle licence

(1) The period for which a vehicle licence, except a seasonal heavy vehicle licence, must be granted is a period elected by the applicant for the grant, being —

(a) a period of 1 year, 6 months or 3 months; or

(b) if the CEO so approves in a particular case — any period up to 1 year.

(1A) The period for which a vehicle licence, except a seasonal heavy vehicle licence, must be renewed is a period elected by the applicant for the renewal, being —

(a) a period of 1 year, 6 months or 3 months; or

(b) if regulation 31A applies to the licence holder in relation to renewal of the vehicle licence — a period of 1 year, 6 months, 3 months or 1 month; or

(c) if the CEO so approves in a particular case — any period up to 1 year.

(2) The period for which a seasonal heavy vehicle licence must be granted is a period elected by the applicant for the grant, being —

(a) a period of 6 months, 5 months, 4 months or 3 months; or

(b) if the CEO so approves in a particular case — any period up to one year.

(3) The period for which a seasonal heavy vehicle licence must be renewed is a period elected by the applicant for the renewal, being —

(a) a period of one month; or

(b) if the CEO so approves in a particular case — any period up to one year.

(4) The period for which a licence is granted begins on the day on which the licence is granted.

(5) The period for which a licence is renewed begins on the day after the day on which the licence expires.

[Regulation 31 amended: SL 2022/149 r. 6; SL 2026/188 r. 4.]

31A. Renewal of vehicle licence by direct debit

(1) In this regulation —

direct debit agreement means an agreement, in a form approved by the CEO, for the payment of a renewal charge by direct debit;

renewal charge, for the renewal of a vehicle licence, means the amount required to be paid under section 5(1)(b)(i) for the renewal of the vehicle licence.

(2) For the purposes of regulation 31(1A)(b), this regulation applies to a licence holder in relation to renewal of a vehicle licence if —

(a) the licence holder is not prohibited under subregulation (3) from paying a renewal charge by direct debit for the vehicle licence; and

(b) the licence holder has elected to pay the renewal charge by direct debit from a bank account by submitting a direct debit request in a form approved by the CEO that contains the details of the bank account; and

(c) the licence holder has accepted the terms of the direct debit agreement; and

(d) neither the direct debit request nor the direct debit agreement have been cancelled or suspended in accordance with their terms; and

(e) the licence holder pays the renewal charge by direct debit in accordance with the direct debit request and the direct debit agreement; and

(f) there are at least 27 clear days between the day on which the direct debit request is submitted and the day on which the licence is to expire; and

(g) the vehicle for which the renewal of a vehicle licence is sought is of a type approved by the CEO under subregulation (4).

(3) The CEO may, by written notice to the licence holder of a vehicle licence, prohibit the licence holder from paying a renewal charge by direct debit for that vehicle licence.

(4) The CEO may approve, in writing, a type of vehicle for the purposes of subregulation (2)(g).

(5) The CEO must publish, on a website maintained by or on behalf of the department of the Public Service principally assisting in the administration of the Act, a list of the types of vehicles approved under subregulation (4).

[Regulation 31A inserted: SL 2022/149 r. 7; amended: SL 2026/188 r. 5.]

32. CEO may vary, grant or renew licences so that they expire on the same day

Despite regulations 29, 30 and 31, the CEO may, on the application of a licence holder of 3 or more vehicle licences —

(a) vary the licences so that they all expire on the same day, being a day selected by the CEO; and

(b) if licences have been varied under paragraph (a), grant or renew any other vehicle licence held by the same licence holder so that the licence expires on the day mentioned in that paragraph.

Division 4 — Classification of vehicle licences

33. Classes of vehicle licences

For section 17, the classes of vehicle licences are Class A, Class B and Class C.

34. Class A vehicle licences

The CEO may license a motor vehicle as of Class A, for unlimited use, if the vehicle complies, in every respect, with the standards and requirements set out in Parts 8, 10 and 11 that apply to that kind of motor vehicle, and not otherwise.

35. Class B vehicle licences

(1) The CEO may license, as of Class B, a motor vehicle that does not comply, in some respect, with the standards and requirements set out in Parts 10 and 11 that apply to that kind of motor vehicle, as long as —

(a) the vehicle complies with Part 8; and

(b) the use of the vehicle is limited in the manner directed by the CEO and, in any event, is so limited that it will not constitute a hazard to other road users.

(2) The CEO may license a motor vehicle as of Class B if the vehicle —

(a) is an agricultural machine; or

(b) is a vehicle that does not comply with Part 8 but the licensing of the vehicle is specially approved, or the licensing of vehicles of its class is generally approved, by the CEO and the use of the vehicle is limited in conformity with any conditions to which that approval is subject.

(3) The CEO must endorse each licence of Class B with the conditions imposed on the use of the vehicle.

36. Class C vehicle licences

(1) The CEO may license, as of Class C, a vehicle that —

(a) does not comply with Part 8; and

(b) is constructed, or has a weight carried by one or more axles, so that it could not, without reconstruction, be made to comply with Part 8; and

(c) is of a class not designed primarily for the carriage of passengers or goods, but for use in the industrial pursuits of mining, quarrying, earth moving, earth drilling, forestry, timber getting, the making, maintenance or cleaning of roads or the construction of major works,

if the licensing of the vehicle is specially approved, or the licensing of vehicles of its class is generally approved, by the CEO and the use of the vehicle is limited in conformity with any condition to which that approval is subject.

(2) The CEO must endorse each licence of Class C with the conditions imposed on the use of the vehicle.

37. Vehicle use to be in accordance with licence conditions

A person must not use, or permit an employee of the person to use, a vehicle the subject of a Class B or Class C licence in breach of a condition imposed on the use of the vehicle.

Penalty:

(a) for a first offence, a fine of 4 PU;

(b) for a subsequent offence, a fine of 8 PU.

Modified penalty: 1 PU.

38. Classes of licences for heavy vehicles

(1) In this regulation —

goods vehicle derivative means a self-propelled special purpose vehicle in which the forward part of the body form and the

greater part of the mechanical equipment are the same as in a goods vehicle;

Table means the Table to subregulation (4);

trailer derivative means a caravan (trailer type) or plant trailer, in which the body form and the greater part of the mechanical equipment are the same as in a trailer or semi-trailer.

(2) For the purposes of this regulation —

(a) a converter dolly and a semi-trailer when used together are to be regarded as one trailer; and

(b) a vehicle exceeds the maximum permissible axle loading if, and only if, the mass supported on any axle or axle group of the vehicle exceeds the applicable mass requirement.

(3) For section 17, and without limiting regulation 33, the classes of licences for heavy vehicles are set out in the Table.

(4) The CEO must license a heavy vehicle as of a particular class according to these features as indicated in the Table —

(a) the description of the vehicle;

(b) the number of axles that the vehicle has;

(c) the MRC of the vehicle.

Table — Classes of licences for heavy vehicles

Column 1 Class	Column 2 No. of axles	Column 3 MRC	Column 4 Conditions as to heavy trailers hauled
Car or bus (not articulated)			
1B2	2	12 000 kg or under	
2B2	2	over 12 000 kg	

Column 1 Class	Column 2 No. of axles	Column 3 MRC	Column 4 Conditions as to heavy trailers hauled
2B3	3	any	
Car or bus (articulated)			
AB3	3	any	
Goods vehicle or motor home			
1R2	2	12 000 kg or under	nil
2R2	2	over 12 000 kg	nil
1R3	3	16 500 kg or under	nil
2R3	3	over 16 500 kg	nil
1R4	4	20 000 kg or under	nil
2R4	4	over 20 000 kg	nil
1R5	5 or more	20 000 kg or under	nil
2R5	5 or more	over 20 000 kg	nil
SR2	2	any	1
SR3	3	any	1
SR4	4	any	1
SR5	5	any	1
MR2	2	any	1

Column 1 Class	Column 2 No. of axles	Column 3 MRC	Column 4 Conditions as to heavy trailers hauled
MR3	3	any	1
MR4	4	any	1
MR5	5 or more	any	1
LR2	2	any	
LR3	3	any	
LR4	4	any	
LR5	5 or more	any	
Prime mover			
SP2	2	any	1 semi-trailer and nil other trailers
SP3	3	any	1 semi-trailer and nil other trailers
SP4	4	any	1 semi-trailer and nil other trailers
SP5	5 or more	any	1 semi-trailer and nil other trailers
MC2	2	any	2 semi-trailers if no other trailers, otherwise 1 semi-trailer
MC3	3	any	2 semi-trailers if no other trailers, otherwise 1 semi-trailer
MC4	4	any	2 semi-trailers if no other trailers,

Column 1 Class	Column 2 No. of axles	Column 3 MRC	Column 4 Conditions as to heavy trailers hauled
			otherwise 1 semi-trailer
MC5	5 or more	any	2 semi-trailers if no other trailers, otherwise 1 semi-trailer
Trailer, not being a towed special purpose vehicle			
HT	any	any	
Special purpose vehicle			
Other than goods vehicle derivative or trailer derivative			
PSV	any	any	
Goods vehicle derivative or trailer derivative not exceeding maximum permissible axle mass loading			
TSV	any	any	
Goods vehicle derivative or trailer derivative exceeding maximum permissible axle mass loading			
OSV2	1 or 2	any	
OSV3	3	any	
OSV4	4	any	
OSV5	5	any	
OSV6	6	any	
OSV7	7	any	
OSV8	8	any	
OSV9	9	any	

(5) If more than one class is appropriate for a vehicle —

(a) of that description; and

(b) with that number of axles; and

(c) with that MRC,

the licence must be of whichever of those classes the owner of the vehicle nominates before the licence is granted or renewed.

39. Conditions imposed as to heavy trailers hauled

(1) If in column 4 of the Table to regulation 38(4) —

(a) "nil" is indicated, a licence of the class described in column 1 of the Table includes a condition that the vehicle must not be used to haul a heavy trailer; or

(b) a number is indicated, a licence of the class described in column 1 of the Table includes a condition that the vehicle must not be used to haul more than that number of heavy trailers; or

(c) a number is indicated followed by a trailer description, a licence of the class described in column 1 of the Table includes a condition that the vehicle must not be used to haul more than that number of heavy trailers of that description but unless otherwise specified the hauling of trailers not of that description is not limited; or

(d) "nil" is indicated followed by a trailer description, a licence of that class includes a condition that the vehicle must not be used to haul a heavy trailer of that description.

(2) A vehicle licence of class SR2, SR3, SR4 or SR5 in the Table to regulation 38(4) includes a condition that the vehicle must not be used to haul a heavy trailer if the vehicle and trailer together have more than 6 axles or a mass greater than 42.5 t.

40. Certain heavy vehicle licences to be endorsed "seasonal"

The CEO must grant or renew a heavy vehicle licence with the endorsement "seasonal" if the person making the application for the grant or renewal specifies that the vehicle is to be used only —

(a) on a road; ~~or~~and

(b) for seasonal work during the year beginning on the day the licence is granted.

[Regulation 40 amended: SL 2026/204 r. 5.]

41. Vehicle use to be in accordance with licence

A person must not use, or permit an employee of the person to use, a heavy vehicle the subject of a licence in breach of a condition imposed on the use of the vehicle.

Penalty:

(a) for a first offence, a fine of 4 PU;

(b) for a subsequent offence, a fine of 8 PU.

Modified penalty: 1 PU.

42. Vehicle licence to be carried, produced in certain cases

(1) A person must not drive, or cause or permit to be driven, a vehicle licensed as of Class C, unless the vehicle licence is carried in or on the vehicle.

(2) The holder of a Class B or Class C licence or a person having it in the person's possession must, if required to do so by a police officer, produce the vehicle licence for inspection.

Division 5 — Permits for unlicensed vehicles

43. Term used: permit

In this Division —

permit means a permit under section 13(1).

44. Application for permit

(1) An application for a permit must specify the period for which the applicant requests the permit to have effect which may be a period —

(a) not exceeding 2 days; or

(b) of one month or any number of months up to and including 12 months.

(2) An application for a permit in relation to a vehicle that —

(a) does not comply with the requirements necessary for licensing the vehicle under the Act; and

(b) is designed or used primarily for recreational, sporting or like purposes,

must be made in writing to the CEO at least 14 days before the commencement of the period in respect of which the permit is requested.

(3) An application for a permit must be accompanied by the relevant fee under subregulation (4).

(4) The fee payable for a permit is —

(a) if the permit is requested in respect of a period not exceeding 2 days, $6.80; and

(b) if the permit is requested in respect of a period of one or more months, the greater of —

(i) the amount assessed by dividing 10% of the relevant vehicle licence charge by 12 then multiplying that sum by the number of months in respect of which the permit is requested; or

(ii) $26.40.

(5) If the CEO is also required or requested to incorporate a policy of insurance under the *Motor Vehicle (Third Party Insurance)*

Act 1943 to cover a vehicle for the period for which a permit has effect, the application for the permit must be accompanied by —

(a) the appropriate premium for the policy of insurance under that Act; and

(b) the duty payable on the policy of insurance under the *Duties Act 2008*.

[Regulation 44 amended: Gazette 12 Jun 2015 p. 2037; 14 Jun 2016 p. 1996; 23 Jun 2017 p. 3268; 22 Jun 2018 p. 2191; 31 May 2019 p. 1724; SL 2020/74 r. 9; SL 2021/92 r. 20; SL 2023/43 r. 21; SL 2024/58 r. 23.]

45. Grant of permit

(1) A permit document must be in a form approved by the CEO.

(2) The permit document must set out —

(a) any conditions imposed on the grant of the permit in addition to the requirements specified by the CEO as mentioned in section 13(1); and

(b) the period for which the permit has effect.

(3) The grant of a permit incorporating a policy of insurance under the *Motor Vehicle (Third Party Insurance) Act 1943* is subject to the *Motor Vehicle (Third Party Insurance) Regulations 2009*.

46. Vehicle use to be in accordance with permit

A person must not drive, or cause or permit the driving of, a vehicle for which a permit has been granted, except in accordance with the permit.

Penalty:

(a) for a first offence, a fine of 4 PU;

(b) for a subsequent offence, a fine of 8 PU.

Modified penalty: 1 PU.

47. Display of signs

A person must not use or cause to be used a vehicle on which there is displayed a sign which indicates that the vehicle or its load exceeds a dimension requirement, unless at the time that the vehicle is so used, a sign of that kind is required to be displayed on the vehicle by a permit.

Penalty:

(a) for a first offence, a fine of 4 PU;

(b) for a subsequent offence, a fine of 8 PU.

Modified penalty: 1 PU.

Division 6 — Miscellaneous

48. Duplicate or certified copy of vehicle licence document

(1) The CEO must, on request, issue to the licence holder of a vehicle or, in the event of that person's death, to the person's executor, a duplicate or certified copy of the vehicle licence document for the vehicle.

(2) A fee of $6.90 is payable for the issue of the duplicate or certified copy if the request is made in person or by telephone.

[Regulation 48 inserted: SL 2022/67 r. 10; amended: SL 2023/43 r. 22.]

49. Licences not current

If a vehicle's licence is suspended or cancelled or has been obtained by misrepresentation or fraud, a licence holder of the vehicle must, if required to do so by a police officer, forthwith deliver up the licence.

Penalty:

(a) for a first offence, a fine of 4 PU;

(b) for a subsequent offence, a fine of 8 PU.

Modified penalty: 2 PU.

50. Change of personal details

(1) In this regulation —

personal details, in relation to a person, means —

(a) the person's full name;

(b) the address of where the person is currently living.

(2) A person who is a licence holder of a vehicle must, within 21 days after each change to the person's personal details that are specified in the licence, give the CEO notice of the change and of the new personal details either in writing or in any other manner approved by the CEO.

Penalty for an offence under this subregulation:

(a) for a first offence, a fine of 4 PU;

(b) for a subsequent offence, a fine of 8 PU.

Modified penalty for an offence under this subregulation: 1 PU.

51. Licence documents to be handed over on disposal

(1) In this regulation —

new owner has the meaning given in section 10(4).

(2) A person who, as principal or agent, disposes of a used licensed vehicle, must ensure that at the time of the disposal the new owner of the vehicle is given the current licence document for the vehicle.

Penalty:

(a) for a first offence, a fine of 4 PU;

(b) for a subsequent offence, a fine of 8 PU.

Modified penalty: 2 PU.

(3) A person who, as principal or agent, disposes of a used vehicle the licence for which has expired in the 3 month period before the time of the disposal, must ensure that at the time of the

disposal the new owner of the vehicle is given the most recent licence document for the vehicle.

Penalty for an offence under this subregulation:

(a) for a first offence, a fine of 4 PU;

(b) for a subsequent offence, a fine of 8 PU.

Modified penalty for an offence under this subregulation: 2 PU.

Division 7 — Vehicle licence charges

Subdivision 1 — General

52. Terms used

(1) In this Division —

agricultural special purpose vehicle means a special purpose vehicle that the CEO is satisfied will be used exclusively in a farming business;

farm means the land on which a farmer carries on the farmer's farming business;

farmer means a person who carries on business as a farmer or grazier;

farming business means the business of farming or grazing;

stock means cattle, sheep, goats or swine.

(2) A reference in this Division to a vehicle being used for any purpose is to be read as a reference to the vehicle being used for that purpose during the period in respect of which a vehicle licence for the vehicle is to be granted or renewed.

53. Vehicle licence charges

The charge for granting or renewing a vehicle licence for a vehicle is the charge specified for the vehicle in this Division.

[Regulation 53 amended: SL 2022/57 r. 5.]

54. Calculation of vehicle licence charges

(1) The vehicle licence charge payable for a vehicle for a period of one year is —

(a) for a vehicle other than a heavy vehicle, the charge payable under Subdivision 2;

(b) for a heavy vehicle, the charge payable under Subdivision 3.

(2) The vehicle licence charge payable for a vehicle for a period of 6 months is one-half of the charge payable for that vehicle for a period of one year.

(3) The vehicle licence charge payable for a vehicle for a period of 3 months is one-quarter of the charge payable for that vehicle for a period of one year.

(4) Except as provided in subregulation (4A), the vehicle licence charge payable for a vehicle for any other period of less than one year is determined in accordance with this formula —

$$\frac{\text{one year charge}}{365} \times \text{Days in the charge period}$$

(4A) The vehicle licence charge payable for renewing a vehicle licence for a vehicle for a period of 1 month pursuant to an election under regulation 31(1A)(b) is one-twelfth of the charge payable for that vehicle for a period of one year.

(5) A charge for the renewal of a vehicle licence is to be calculated by reference to the charge applicable on the day next succeeding the day on which the licence would have expired but for the renewal.

(6) For the purposes of ascertaining a charge under this Division, the tare of a vehicle is —

(a) as specified by the vehicle's manufacturer; or

(b) as specified by the CEO if —

(i) the manufacturer has not specified the tare; or

(ii) the manufacturer cannot be identified; or

(iii) the vehicle has been modified to the extent that the manufacturer's specification is no longer appropriate.

[Regulation 54 amended: SL 2022/149 r. 8.]

54A. Reduction if election made for 1 year grant or renewal

(1) If an application is made for the grant or renewal of a vehicle licence for a vehicle other than a heavy vehicle and an election is made under regulation 31(1) or (1A) for a 1 year grant or renewal of that licence, the charge for the grant or renewal is reduced by $6.60.

(2) A reduction under subregulation (1) is to be applied before any concession under these regulations.

[Regulation 54A inserted: SL 2022/57 r. 6; amended: SL 2022/149 r. 9.]

Subdivision 2 — Vehicle licence charges for vehicles other than heavy vehicles

55. Application

This Subdivision applies to vehicles other than heavy vehicles.

[Regulation 55 amended: SL 2022/57 r. 7.]

*[**56.** Deleted: SL 2022/57 r. 8.]*

57. Car, bus, goods vehicle and motor home

For a car or bus, a goods vehicle or a motor home the charge is $13.20 plus $29.76 per 100 kg, or part of 100 kg, of tare, subject to a maximum charge of $586.00.

[Regulation 57 amended: Gazette 27 May 2015 p. 1865 and 1871; 27 May 2016 p. 1552; 26 May 2017 p. 2643; 25 May 2018 p. 1644; 17 May 2019 p. 1439; SL 2021/64 r. 5; SL 2022/57 r. 9; SL 2023/45 r. 27; SL 2024/58 r. 12; SL 2025/65 r. 10; SL 2026/63 r. 7.]

58. Prime mover

For a prime mover the charge is $13.20 plus $29.76 per 100 kg, or part of 100 kg, of tare, subject to a maximum charge of $1 551.00.

[Regulation 58 amended: Gazette 27 May 2015 p. 1865 and 1871; 27 May 2016 p. 1552; 26 May 2017 p. 2643; 25 May 2018 p. 1644; 17 May 2019 p. 1439; SL 2021/64 r. 5; SL 2022/57 r. 10; SL 2023/45 r. 28; SL 2024/58 r. 12; SL 2025/65 r. 10; SL 2026/63 r. 7.]

59. Trailer other than towed special purpose vehicle

For a trailer other than a towed special purpose vehicle the charge is $13.20 plus $14.88 per 100 kg, or part of 100 kg, of tare.

[Regulation 59 amended: Gazette 27 May 2015 p. 1866; 27 May 2016 p. 1552; 26 May 2017 p. 2643; 25 May 2018 p. 1644; 17 May 2019 p. 1439; SL 2021/64 r. 5; SL 2022/57 r. 11; SL 2023/45 r. 29; SL 2024/58 r. 12; SL 2025/65 r. 10; SL 2026/63 r. 7.]

60. Motor cycle

For a motor cycle the charge is $13.20 plus —

(a) $59.52 for a motor cycle that has a piston engine and an engine capacity that does not exceed 250 cm^3; or

(b) $89.28 for a motor cycle that has a piston engine and an engine capacity that exceeds 250 cm^3; or

(c) $59.52 for a motor cycle that does not have a piston engine and has a power to weight ratio that does not exceed 150 kW/t; or

(d) $89.28 for a motor cycle that does not have a piston engine and has a power to weight ratio that exceeds 150 kW/t.

[Regulation 60 inserted: SL 2023/45 r. 30; amended: SL 2024/58 r. 12; SL 2025/65 r. 10; SL 2026/63 r. 7.]

61. Special purpose vehicle

For a special purpose vehicle the charge is $13.20 plus $7.44 per 100 kg, or part of 100 kg, of the tare, subject to a maximum charge of $135.00.

[Regulation 61 amended: Gazette 27 May 2015 p. 1866; 27 May 2016 p. 1553; 26 May 2017 p. 2643; 25 May 2018 p. 1644; 17 May 2019 p. 1439; SL 2021/64 r. 5; SL 2022/57 r. 13; SL 2023/45 r. 31; SL 2024/58 r. 12; SL 2025/65 r. 10; SL 2026/63 r. 7.]

Subdivision 3 — Vehicle licence charges for heavy vehicles

62. Application

This Subdivision applies to heavy vehicles.

[Regulation 62 amended: SL 2022/57 r. 14.]

63. Car or bus

For a car or bus the charge is an amount corresponding to the licence class in the Table.

Table

Licence class	Charge $
1B2	572
2B2	572
2B3	3 165
AB3	572

[Regulation 63 amended: Gazette 27 May 2015 p. 1867-8; 26 May 2017 p. 2643; 25 May 2018 p. 1644; 17 May 2019 p. 1439; SL 2020/73 r. 5; SL 2021/64 r. 5; SL 2022/57 r. 15; SL 2023/45 r. 32; SL 2024/58 r. 12; SL 2025/65 r. 10.]

64. Goods vehicle and motor home

For a goods vehicle or motor home the charge is an amount corresponding to the licence class in the Table.

Table

Licence class	Charge $
1R2	572
2R2	985
1R3	985

Licence class	Charge $
2R3	1 298
1R4	985
2R4	1 298
1R5	985
2R5	1 298
SR2	985
SR3	1 298
SR4	2 414
SR5	2 414
MR2	8 845
MR3	8 845
MR4	9 553
MR5	9 553
LR2	12 198
LR3	12 198
LR4	12 198

Licence class	Charge $
LR5	12 198

[Regulation 64 amended: Gazette 27 May 2015 p. 1868-9; 26 May 2017 p. 2643-4; 25 May 2018 p. 1644; 17 May 2019 p. 1439; SL 2020/73 r. 5; SL 2021/64 r. 5; SL 2022/57 r. 16; SL 2023/45 r. 33; SL 2024/58 r. 12; SL 2025/65 r. 10.]

65. Prime mover

For a prime mover the charge is an amount corresponding to the licence class in the Table.

Table

Licence class	Charge $
SP2	1 514
SP3	5 962
SP4	6 560
SP5	6 560
MC2	10 703
MC3	10 703
MC4	11 773

Licence class	Charge $
MC5	11 773

[Regulation 65 amended: Gazette 27 May 2015 p. 1869-70; 26 May 2017 p. 2643-4; 25 May 2018 p. 1644; 17 May 2019 p. 1439; SL 2020/73 r. 5; SL 2021/64 r. 5; SL 2022/57 r. 17; SL 2023/45 r. 34; SL 2024/58 r. 12; SL 2025/65 r. 10.]

66. Trailer, not being a towed special purpose vehicle

For a trailer other than a towed special purpose vehicle (licence class HT) the charge is $572.00 for every axle fitted.

[Regulation 66 amended: Gazette 27 May 2015 p. 1871; 26 May 2017 p. 2643-4; 25 May 2018 p. 1644; 17 May 2019 p. 1439; SL 2020/73 r. 5; SL 2021/64 r. 5; SL 2022/57 r. 18; SL 2023/45 r. 35; SL 2024/58 r. 12; SL 2025/65 r. 10.]

67. Special purpose vehicle

For a special purpose vehicle the charge is an amount corresponding to the licence class in the Table.

Table

Licence class	Charge $
PSV	132
TSV	132
OSV2	465
OSV3	932

Licence class	Charge $
OSV4	1 399
OSV5	1 866
OSV6	2 332
OSV7	2 800
OSV8	3 266
OSV9	3 734

[Regulation 67 amended: Gazette 27 May 2015 p. 1870-1; 26 May 2017 p. 2643-4; 25 May 2018 p. 1645; 17 May 2019 p. 1439-40; SL 2020/73 r. 5; SL 2021/64 r. 5; SL 2022/57 r. 19; SL 2023/45 r. 36; SL 2024/58 r. 12; SL 2025/65 r. 10.]

Subdivision 4 — Exemptions

68. Exemptions not available for seasonally licensed heavy vehicles

This Subdivision does not apply to a seasonally licensed heavy vehicle.

69. Government, emergency vehicles

A vehicle licence charge is not payable for a vehicle that —

(a) is owned by the Crown in right of the State and has an MRC not exceeding 4 500 kg; or

(b) is owned by a local government; or

(c) is —

(i) owned by the Crown in any capacity or a local government; and

(ii) under the control of the chief executive officer of the department of the Public Service principally assisting in the administration of the *Fire and Emergency Services Act 1998*; and

(iii) to be used exclusively for preventing and extinguishing fires or dealing with other emergencies;

or

(d) is to be used exclusively as an ambulance.

[Regulation 69 amended: Gazette 7 Feb 2017 p. 1178 (disallowed: Gazette 30 Jun 2017 p. 3612 [1]*).]*

70. Farm vehicles

(1) This regulation does not apply to an agricultural machine or agricultural special purpose vehicle.

(2) A vehicle licence charge is not payable for a vehicle if the CEO is satisfied that the vehicle is owned by a farmer and is to be used only on the owner's farm or —

(a) to pass from one portion of the farm to another; or

(b) to travel between the farm and some other place to carry out firefighting or fire prevention operations; or

(c) to travel between the farm and some other place to take part in fire control exercises previously authorised by a bush fire control officer appointed under the *Bush Fires Act 1954*; or

(d) if the farm is in an area that is declared by the Minister administering the *Biosecurity and Agriculture Management Act 2007* to be drought affected or water deficient, to travel between the farm and a water supply for the purpose of carting water for stock or for domestic purposes.

71. Vehicles owned by full-time carers

A vehicle licence charge is not payable for a vehicle if the CEO is satisfied that the vehicle is owned by a person who is receiving from the Commonwealth agency known as Centrelink the maximum amount of the carer's payment.

72. Exemption or refund in exceptional circumstances

(1) If the CEO is satisfied that exceptional circumstances warrant the refund, waiver or reduction being given in a particular case, the CEO may, in that case —

(a) refund all or part of a payment that has been made in respect of any vehicle licence charge; or

(b) in writing, waive or reduce a vehicle licence charge.

(2) The CEO may, in writing given to a person affected by a decision under subregulation (1)(b), vary or revoke the waiver or reduction.

(3) A refund, waiver or reduction may be given subject to the conditions imposed by the CEO and specified in the licence.

(4) A person must not contravene a condition imposed under subregulation (3).

Penalty for an offence under this subregulation: a fine of 8 PU.

Subdivision 5 — Concessions

73. Concessions not available for seasonally licensed heavy vehicles

This Subdivision does not apply to a seasonally licensed heavy vehicle.

74. Certain heavy vehicles used outside South-west Division

The vehicle licence charge payable for a vehicle is reduced by 50% if the CEO is satisfied that the vehicle —

(a) has an unloaded mass exceeding 2 t; and

(b) is to be used exclusively on roads outside the South-west Division as described in the *Land Administration Act 1997* Schedule 1.

75. Vehicles used for prospecting

The vehicle licence charge payable for a vehicle is reduced by 50% if the CEO is satisfied that the vehicle —

(a) is owned by —

(i) a genuine prospector; or

(ii) a person (other than a company as defined in the *Corporations Act 2001* (Commonwealth)) who searches for or produces metals or minerals from land in which the person holds an interest;

and

(b) is to be used by that prospector or person exclusively or principally in connection with prospecting.

76. Vehicles used for pulling sandalwood

The vehicle licence charge payable for a vehicle is reduced by 50% if the CEO is satisfied that the vehicle —

(a) is owned by a genuine sandalwood puller; and

(b) is to be used by that person exclusively or principally in connection with the pulling of sandalwood.

77. Vehicles used for kangaroo hunting

The vehicle licence charge payable for a vehicle is reduced by 50% if the CEO is satisfied that the vehicle —

(a) is owned by a genuine kangaroo hunter; and

(b) is to be used by that person exclusively or principally in connection with the hunting of kangaroos.

78. Vehicles used for beekeeping

The vehicle licence charge payable for a vehicle is reduced by 50% if the CEO is satisfied that the vehicle —

(a) is owned by a person who is a beekeeper as defined in the *Biosecurity and Agriculture Management Regulations 2013* and who engages in the keeping of bees substantially as a means of livelihood; and

(b) is to be used by the person exclusively or principally in connection with beekeeping.

79. Certain vehicles used to transport stock

(1) The vehicle licence charge payable for a vehicle is reduced by 50% if the CEO is satisfied that the vehicle —

(a) has an unloaded mass exceeding 1 524 kg; and

(b) is owned by a person who carries on the business of transporting stock; and

(c) is to be used by the person exclusively or principally for journeys that involve the carriage of stock.

(2) A vehicle licence in respect of which a reduced vehicle licence charge is paid under subregulation (1) is taken to be subject to conditions that —

(a) the vehicle must not be used for any journey that involves the carriage of goods other than a journey that involves the carriage of stock; and

(b) goods other than stock must not be carried on the vehicle in the course of a journey that involves the carriage of stock unless the carriage of those goods is authorised by the CEO under subregulation (3).

(3) The CEO may, on payment of a fee of $11.50, authorise the use of a vehicle to which this regulation applies to carry goods other

than stock on a specified journey or on a specified part of a journey.

(4) An authorisation is to be in writing and may be amended or revoked by the CEO.

(5) All fees received by the CEO under subregulation (3) are to be credited to the Consolidated Account.

80. Vehicles used for farm haulage

(1) This regulation does not apply to —

(a) an agricultural machine or an agricultural special purpose vehicle; or

(b) a vehicle that has an unloaded mass of less than 1 524 kg.

(2) The vehicle licence charge payable for a vehicle that is a goods vehicle, trailer, semi-trailer or is to be used for the purpose of hauling a trailer or semi-trailer is reduced by 50% if the CEO is satisfied that the vehicle —

(a) is owned by a farmer; and

(b) is to be used exclusively or principally for carrying the products of, or requisites for, the owner's farming business.

(3) A reduction under this regulation does not apply at any one time in respect of more than one vehicle used in connection with the carrying on of the same business.

(4) Subregulation (3) does not prevent a reduction applying in respect of —

(a) a semi-trailer if a reduction also applies in respect of a vehicle that is to be used for the purpose of hauling that semi-trailer; or

(b) a vehicle if a reduction also applies in respect of a semi-trailer that is to be hauled by that vehicle.

81. Agricultural machines and agricultural special purpose vehicles

The vehicle licence charge payable for a vehicle that is an agricultural machine or agricultural special purpose vehicle is reduced to $4 if the CEO is satisfied that the vehicle is only to be used for one or more of these purposes —

(a) to pass from one portion of a farm to another;

(b) to travel between a farm and some other place for farming activities;

(c) to carry out firefighting or fire prevention operations;

(d) to take part in fire control exercises previously authorised by a bush fire control officer appointed under the *Bush Fires Act 1954*;

(e) if a farm is in an area that is declared by the Minister administering the *Biosecurity and Agriculture Management Act 2007* to be drought affected or water deficient, to travel between that farm and a water supply for the purpose of carting water for stock or for domestic purposes.

82. Certain semi-trailers

The vehicle licence charge payable for a semi-trailer is reduced by 75% if the CEO is satisfied that, during the period for which the charge is to be calculated —

(a) the semi-trailer will be towed by a prime mover licensed in the name of the owner of the semi-trailer and no other prime mover; and

(b) the semi-trailer will not be towed together with another trailer; and

(c) other semi-trailers licensed in the name of the owner will be towed by that prime mover and no other prime mover.

[Regulation 82 amended: SL 2022/57 r. 20.]

83. Vehicles owned by pensioners, seniors

(1) The vehicle licence charge payable for a vehicle is reduced by 50% if the CEO is satisfied that the vehicle —

(a) is —

(i) a car or bus with an unloaded mass not exceeding 3 000 kg; or

(ii) a goods vehicle with an unloaded mass not exceeding 3 000 kg; or

(iii) a motor home; or

(iv) a motor cycle; or

(v) a moped as defined in the *Road Traffic (Authorisation to Drive) Regulations 2014* regulation 3;

and

(b) is owned by a person whom the CEO is satisfied —

(i) is the holder of a current pensioner concession card issued by the Department of Social Security, or the Department of Veteran's Affairs, of the Commonwealth; or

(ii) is the holder of both a WA Seniors Card and a Commonwealth Seniors Health Card.

(2) A person is not entitled to a reduction under this regulation in respect of more than one vehicle at any one time.

84. Motor homes

The vehicle licence charge that, but for this regulation, would be payable for a motor home is reduced by 50%.

[Regulation 84 amended: SL 2021/37 r. 5.]

84A. Classic vehicles

(1) In this regulation —

approved motoring organisation means a body corporate approved under subregulation (4);

classic vehicle means a vehicle that —

(a) is a street rod vehicle; or

(b) if a discount period were to apply in relation to the vehicle — was manufactured in a calendar year that started at least 30 years before the start of the calendar year in which the discount period would begin;

Example for this definition:

For the purposes of paragraph (b) — If a discount period in relation to a vehicle would begin on 1 July 2025, the start of the calendar year in which the discount period would begin is 1 January 2025. The vehicle is a classic vehicle if it was manufactured in a calendar year that started at least 30 years before 1 January 2025, that is, in a calendar year that started on or before 1 January 1995.

discount period means the period for which a reduced charge is paid;

financial member, of an approved motoring organisation, means a person who pays a membership fee to belong to the organisation;

motoring event means an event —

(a) held by an approved motoring organisation; or

(b) held by another person and approved by an approved motoring organisation;

reduced charge means a vehicle licence charge reduced in accordance with subregulation (2).

(2) The vehicle licence charge that, but for this regulation, would be payable for a classic vehicle is reduced by 75% if —

(a) the vehicle is a light vehicle; and

(b) the vehicle is owned by —

(i) an approved motoring organisation; or

(ii) a person who the CEO is satisfied will be a financial member of an approved motoring organisation for the duration of the discount period;

and

(c) the CEO is satisfied the vehicle will not be used —

(i) at motoring events on more than 60 days in a calendar year in which the whole or a part of the discount period occurs; and

(ii) for other purposes (including for testing, maintenance or repair) on more than 30 days in a calendar year in which the whole or a part of the discount period occurs.

(3) A classic vehicle is not used on a day for the purposes of subregulation (2)(c)(ii) if the vehicle is only driven by a repairer of the vehicle within a 5 km radius of the place where the vehicle is tested, maintained or repaired.

(4) The CEO may approve a body corporate as an approved motoring organisation if the CEO is satisfied that the body corporate's operations include offering membership to persons who own classic vehicles.

(5) The CEO may approve a label to be displayed on a classic vehicle for which a reduced charge is paid.

(6) An owner of a classic vehicle who pays a reduced charge for the vehicle must ensure that, for the duration of the discount period, any label approved by the CEO under subregulation (5) is —

(a) displayed in a conspicuous place on the vehicle; and

(b) unobscured.

Penalty for this subregulation: a fine of 10 PU.

Modified penalty for this subregulation: 4 PU.

[Regulation 84A inserted: SL 2021/37 r. 6; amended: SL 2024/256 r. 4.]

85. Reductions not cumulative

(1) Subject to subregulation (3), only one reduction under this Subdivision is to be applied to the vehicle licence charge payable for a vehicle.

(2) If a vehicle qualifies for 2 or more reductions under this Subdivision, the owner of the vehicle may choose which one is to be applied.

(3) A vehicle licence charge that has been reduced under a regulation in this Subdivision, can be further reduced in accordance with regulation 84.

[Regulation 85 amended: SL 2021/37 r. 7; SL 2022/57 r. 21.]

Division 8 — Fees relating to vehicle licensing

Subdivision 1 — Vehicle examination fees

86. Terms used

In this Subdivision —

initial examination, in relation to a school bus or tow truck, means an examination of the vehicle by the CEO for the purposes of the Act, if the vehicle —

(a) has not been licensed in this State; or

(b) has not been examined (other than at a first examination if a subsequent examination is required) as a school bus or tow truck in this State; or

(c) is a tow truck taken to comply with Part 12 Division 1 under regulation 510 that has not been examined (other than at a first examination if a subsequent examination is required) on or after 7 November 2023; or

(d) is required to be examined under a contract with the Authority (as defined in the *Public Transport Authority Act 2003* section 3);

motor carrier means a —

(a) motor vehicle that —

(i) is designed to travel on 3 wheels; and

(ii) has an unladen mass of not more than 1 016 kg; and

(iii) is designed with a significant portion of its steering mechanism and other controls similar to those of a motor cycle;

or

(b) motorised wheelchair other than a motorised wheelchair that is designed so as not to be capable of a speed exceeding 10 km/h;

other examination, in relation to a school bus or tow truck, means —

(a) an examination of the vehicle by the CEO for the purposes of the Act conducted for the purpose of renewing the vehicle licence; or

(b) any other examination of the vehicle by the CEO for the purposes of the Act that is not an initial examination;

region, in relation to a named region, means the region of that name described in the *Regional Development Commissions Act 1993* Schedule 1;

school bus has the meaning given in regulation 226.

[Regulation 86 amended: SL 2023/43 r. 23.]

87. Fees for vehicle examinations in non-regional areas

(1) The fees specified in the Table are payable by the owner of a vehicle for examination of the vehicle by the CEO for the purposes of the Act.

(2) This regulation applies only if the examination is conducted in a place other than a region mentioned in this Division.

Table

Vehicle	First examination ($)	Subsequent examination ($)
Trailer without brakes, motor cycle, motor carrier	183.00	145.90
Heavy vehicle (that is not a school bus or tow truck) examined at an inspection station	286.95	173.05
Heavy vehicle (that is not a school bus or tow truck) examined at a place other than an inspection station	326.70	239.70
School bus or tow truck — initial examination	381.85	173.05
School bus or tow truck — other examination	327.60	173.05
All other vehicles	225.40	153.85

[Regulation 87 amended: Gazette 12 Jun 2015 p. 2037; 14 Jun 2016 p. 1996; 23 Jun 2017 p. 3261; 22 Jun 2018 p. 2186; 31 May 2019 p. 1724; SL 2020/74 r. 9; SL 2021/92

r. 10; SL 2022/67 r. 11; SL 2023/43 r. 24; SL 2024/58 r. 23; SL 2025/65 r. 15; SL 2026/63 r. 12.]

88. Fees for vehicle examination in the Gascoyne region

The fees specified in the Table are payable by the owner of a vehicle for examination of the vehicle by the CEO in the Gascoyne region for the purposes of the Act.

Table

Vehicle	First examination ($)	Subsequent examination ($)
Trailer without brakes, motor cycle, motor carrier	191.45	152.30
Heavy vehicle (that is not a school bus or tow truck)	301.10	180.95
School bus or tow truck — initial examination	401.25	180.95
School bus or tow truck — other examination	344.00	180.95
All other vehicles	236.20	160.70

[Regulation 88 amended: Gazette 12 Jun 2015 p. 2037; 14 Jun 2016 p. 1996-7; 23 Jun 2017 p. 3262; 22 Jun 2018 p. 2187; 31 May 2019 p. 1724; SL 2020/74 r. 9; SL 2021/92 r. 11; SL 2022/67 r. 12; SL 2023/43 r. 25; SL 2024/58 r. 23; SL 2025/65 r. 15; SL 2026/63 r. 12.]

89. Fees for vehicle examination in the Goldfields-Esperance region

The fees specified in the Table are payable by the owner of a vehicle for examination of the vehicle by the CEO in the Goldfields-Esperance region for the purposes of the Act.

Table

Vehicle	First examination ($)	Subsequent examination ($)
Trailer without brakes, motor cycle, motor carrier	186.05	148.25
Heavy vehicle (that is not a school bus or tow truck)	292.10	175.90
School bus or tow truck — initial examination	388.90	175.90
School bus or tow truck — other examination	333.55	175.90
All other vehicles	229.30	156.35

[Regulation 89 amended: Gazette 12 Jun 2015 p. 2037-8; 14 Jun 2016 p. 1997; 23 Jun 2017 p. 3262-3; 22 Jun 2018 p. 2187; 31 May 2019 p. 1724; SL 2020/74 r. 9; SL 2021/92 r. 12; SL 2022/67 r. 13; SL 2023/43 r. 26; SL 2024/58 r. 23; SL 2025/65 r. 15; SL 2026/63 r. 12.]

90. Fees for vehicle examination in the Great Southern region

The fees specified in the Table are payable by the owner of a vehicle for examination of the vehicle by the CEO in the Great Southern region for the purposes of the Act.

Table

Vehicle	First examination ($)	Subsequent examination ($)
Trailer without brakes, motor cycle, motor carrier	187.00	148.95
Heavy vehicle (that is not a school bus or tow truck)	293.65	176.80
School bus or tow truck — initial examination	391.00	176.80
School bus or tow truck — other examination	335.35	176.80
All other vehicles	230.50	157.10

[Regulation 90 inserted: Gazette 22 Jun 2018 p. 2187-8; amended: Gazette 31 May 2019 p. 1725; SL 2020/74 r. 9; SL 2021/92 r. 13; SL 2022/67 r. 14; SL 2023/43 r. 27; SL 2024/58 r. 23; SL 2025/65 r. 15; SL 2026/63 r. 12.]

91. Fees for vehicle examination in the Kimberley region

The fees specified in the Table are payable by the owner of a vehicle for examination of the vehicle by the CEO in the Kimberley region for the purposes of the Act.

Table

Vehicle	First examination ($)	Subsequent examination ($)
Trailer without brakes, motor cycle, motor carrier	196.65	156.25
Heavy vehicle (that is not a school bus or tow truck)	309.90	185.85
School bus or tow truck — initial examination	413.20	185.85
School bus or tow truck — other examination	354.15	185.85
All other vehicles	242.85	164.95

[Regulation 91 amended: Gazette 12 Jun 2015 p. 2038; 14 Jun 2016 p. 1997; 23 Jun 2017 p. 3264; 22 Jun 2018 p. 2188; 31 May 2019 p. 1725; SL 2020/74 r. 9; SL 2021/92 r. 14; SL 2022/67 r. 15; SL 2023/43 r. 28; SL 2024/58 r. 23; SL 2025/65 r. 15; SL 2026/63 r. 12.]

92. Fees for vehicle examination in the Mid West region

The fees specified in the Table are payable by the owner of a vehicle for examination of the vehicle by the CEO in the Mid West region for the purposes of the Act.

Table

Vehicle	First examination ($)	Subsequent examination ($)
Trailer without brakes, motor cycle, motor carrier	183.00	145.90
Heavy vehicle (that is not a school bus or tow truck)	286.95	173.05
School bus or tow truck — initial examination	381.85	173.05
School bus or tow truck — other examination	327.60	173.05
All other vehicles	225.40	153.85

[Regulation 92 amended: Gazette 12 Jun 2015 p. 2038; 14 Jun 2016 p. 1998; 23 Jun 2017 p. 3264-5; 22 Jun 2018 p. 2188-9; 31 May 2019 p. 1725; SL 2020/74 r. 9; SL 2021/92 r. 15; SL 2022/67 r. 16; SL 2023/43 r. 29; SL 2024/58 r. 23; SL 2025/65 r. 15; SL 2026/63 r. 12.]

92A. Fees for vehicle examination in the Peel region

The fees specified in the Table are payable by the owner of a vehicle for examination of the vehicle by the CEO in the Peel region for the purposes of the Act.

Table

Vehicle	First examination ($)	Subsequent examination ($)
Trailer without brakes, motor cycle, motor carrier	183.15	146.00
Heavy vehicle (that is not a school bus or tow truck)	287.20	173.20
School bus or tow truck — initial examination	382.20	173.20
School bus or tow truck — other examination	327.90	173.20
All other vehicles	225.60	153.95

[Regulation 92A inserted: Gazette 22 Jun 2018 p. 2189; amended: Gazette 31 May 2019 p. 1725; SL 2020/74 r. 9; SL 2021/92 r. 16; SL 2022/67 r. 17; SL 2023/43 r. 30; SL 2024/58 r. 23; SL 2025/65 r. 15; SL 2026/63 r. 12.]

93. Fees for vehicle examination in the Pilbara region

The fees specified in the Table are payable by the owner of a vehicle for examination of the vehicle by the CEO in the Pilbara region for the purposes of the Act.

Table

Vehicle	First examination ($)	Subsequent examination ($)
Trailer without brakes, motor cycle, motor carrier	206.05	163.40
Heavy vehicle (that is not a school bus or tow truck)	325.60	194.60
School bus or tow truck — initial examination	434.70	194.60
School bus or tow truck — other examination	372.35	194.60
All other vehicles	254.80	172.50

[Regulation 93 amended: Gazette 12 Jun 2015 p. 2038; 14 Jun 2016 p. 1998; 23 Jun 2017 p. 3265; 22 Jun 2018 p. 2189-90; 31 May 2019 p. 1725; SL 2020/74 r. 9; SL 2021/92 r. 17; SL 2022/67 r. 18; SL 2023/43 r. 31; SL 2024/58 r. 23; SL 2025/65 r. 15; SL 2026/63 r. 12.]

93A. Fees for vehicle examination in the South West region

The fees specified in the Table are payable by the owner of a vehicle for examination of the vehicle by the CEO in the South West region for the purposes of the Act.

Table

Vehicle	First examination ($)	Subsequent examination ($)
Trailer without brakes, motor cycle, motor carrier	183.00	145.90
Heavy vehicle (that is not a school bus or tow truck)	286.95	173.05
School bus or tow truck — initial examination	381.85	173.05
School bus or tow truck — other examination	327.60	173.05
All other vehicles	225.40	153.85

[Regulation 93A amended: Gazette 14 Jun 2016 p. 1994-5; 23 Jun 2017 p. 3266; 22 Jun 2018 p. 2190; 31 May 2019 p. 1725; SL 2020/74 r. 9; SL 2021/92 r. 18; SL 2022/67 r. 19; SL 2023/43 r. 32; SL 2024/58 r. 23; SL 2025/65 r. 15; SL 2026/63 r. 12.]

94. Fees for vehicle examination in the Wheatbelt region

The fees specified in the Table are payable by the owner of a vehicle for examination of the vehicle by the CEO in the Wheatbelt region for the purposes of the Act.

Table

Vehicle	First examination ($)	Subsequent examination ($)
Trailer without brakes, motor cycle, motor carrier	184.70	147.20
Heavy vehicle (that is not a school bus or tow truck)	289.80	174.65
School bus or tow truck — initial examination	385.75	174.65
School bus or tow truck — other examination	330.90	174.65
All other vehicles	227.55	155.20

[Regulation 94 amended: Gazette 12 Jun 2015 p. 2038-9; 14 Jun 2016 p. 1998; 23 Jun 2017 p. 3266-7; 22 Jun 2018 p. 2190; 31 May 2019 p. 1725; SL 2020/74 r. 9; SL 2021/92 r. 19; SL 2022/67 r. 20; SL 2023/43 r. 33; SL 2024/58 r. 23; SL 2025/65 r. 15; SL 2026/63 r. 12.]

95. Fees for examination for verification of identity

(1) The fee specified in the Table for the place at which is conducted an examination of the licensed vehicle by the CEO for the purpose of verifying the vehicle's identity or specifications is payable by the vehicle's owner.

Table

Place of examination	Fee ($)
Place other than a region mentioned in this Division	164.45
Gascoyne region	171.90
Goldfields-Esperance region	167.15
Great Southern region	167.95
Kimberley region	176.45
Mid West region	164.45
Peel region	164.60
Pilbara region	184.70
South West region	164.45
Wheatbelt region	165.95

(2) If the CEO is satisfied that a compliance plate has previously been fitted to a vehicle, but is no longer attached due to loss or damage, then the vehicle is to be taken to be fitted with a compliance plate for the purposes of subregulation (1).

[Regulation 95 amended: Gazette 12 Jun 2015 p. 2039; 14 Jun 2016 p. 1995-6; 23 Jun 2017 p. 3267; 22 Jun 2018 p. 2191; 31 May 2019 p. 1726; SL 2020/74 r. 9; SL 2021/92

r. 20; SL 2022/67 r. 21; SL 2023/43 r. 34; SL 2024/58 r. 23; SL 2025/65 r. 15; SL 2026/63 r. 12.]

96. Exemption for person with disability

If the controls of a vehicle other than a heavy vehicle have been, in the opinion of a person authorised to issue a certificate of inspection in relation to the vehicle, substantially modified to enable use by a person with disability, the owner of that vehicle is exempt from the payment of fees under this Subdivision if that owner is the person for whose use the vehicle has been modified.

Subdivision 2 — Other fees relating to vehicle licensing

*[**97**. Deleted: Gazette 22 Jun 2018 p. 2191.]*

98. Fee payable by motor vehicle dealer or vehicle manufacturer licensing vehicle

(1) A fee of $13.30 is payable —

(a) by a motor vehicle dealer licensed under the *Motor Vehicle Dealers Act 1973* section 15 wishing to licence a vehicle that is intended to be sold by the dealer; or

(b) by the operator of a business manufacturing vehicles wishing to licence a vehicle manufactured in that business.

(2) The fee mentioned in subregulation (1) is not payable in respect of a particular vehicle if the vehicle is examined under regulation 24(1) or (2).

(3) The fee mentioned in subregulation (1) is in addition to any charge payable under regulation 53 in relation to the vehicle.

[Regulation 98 amended: Gazette 12 Jun 2015 p. 2039; 14 Jun 2016 p. 1999; 23 Jun 2017 p. 3268; 31 May 2019 p. 1726; SL 2020/74 r. 9; SL 2021/92 r. 20.]

99. Recording fees

(1) Except as provided in subregulation (1A), a recording fee of $9.70 is payable in respect of the grant or renewal of a vehicle licence for a vehicle.

(1A) A recording fee of the following amount is payable in respect of the renewal of a vehicle licence where the amount referred to in section 5(1)(b)(i) is paid by direct debit from a bank account —

(a) for a renewal of 1 year — $9.50;

(b) for a renewal of 6 months — $7.35;

(c) for a renewal of 3 months — $3.95;

(d) for a renewal of 1 month — $1.75.

[(2) deleted]

[Regulation 99 amended: Gazette 12 Jun 2015 p. 2039; 14 Jun 2016 p. 1999; 22 Jun 2018 p. 2191; 17 May 2019 p. 1440; SL 2022/149 r. 10; SL 2024/58 r. 14; SL 2025/65 r. 12; SL 2026/63 r. 9; SL 2026/188 r. 6.]

100. Transfer fee

A fee of $20.50 is payable in respect of the transfer of a vehicle licence.

[Regulation 100 amended: Gazette 12 Jun 2015 p. 2039; 14 Jun 2016 p. 1999; 22 Jun 2018 p. 2191; 31 May 2019 p. 1726; SL 2020/74 r. 9; SL 2021/92 r. 20; SL 2022/67 r. 21; SL 2023/43 r. 35; SL 2024/58 r. 23.]

101. Fee for issuing duplicate tax invoices for fees paid

A fee of $7.59 is payable for a duplicate tax invoice in respect of these —

(a) a vehicle licence renewal notice;

(b) a vehicle licence renewal receipt;

(c) a new vehicle licence;

(d) a vehicle fee adjustment;

(e) a vehicle inspection receipt;

(f) a temporary permit for the movement of an unlicensed vehicle.

[Regulation 101 amended: Gazette 12 Jun 2015 p. 2039; 14 Jun 2016 p. 1999; 23 Jun 2017 p. 3268; 22 Jun 2018 p. 2191; 31 May 2019 p. 1726; SL 2025/65 r. 15.]

Subdivision 3 — Exemptions, refunds

102. Power to give exemption or refund in exceptional circumstances

(1) The CEO may, if the CEO is satisfied that exceptional circumstances warrant the refund or exemption being given in a particular case —

(a) refund all or part of a payment that has been made in respect of any fee payable under this Division; or

(b) in writing, exempt a person or a class of persons from payment of any fee payable under this Division or from payment of part of the fee.

(2) The CEO may, in writing given to a person exempted under subregulation (1)(b), vary or revoke the exemption.

(3) An exemption may be given subject to the conditions imposed by the CEO and specified in the exemption.

(4) A person must not contravene a condition of an exemption.

Penalty for an offence under this subregulation: a fine of 8 PU.

Part 3 — Overseas vehicles when temporarily in Australia

103. Terms used

In this Part —

application means an application under section 22 or 24;

contract of insurance means a contract of insurance mentioned in section 22(2)(b) or 24(2)(c);

licence, in relation to an overseas vehicle, has the meaning given by section 20;

overseas vehicle has the meaning given in section 20.

104. Applications for vehicle licence, extension or renewal of vehicle licence for overseas vehicles

An application under section 22(1) or 24(1) must set out —

(a) the full name and permanent overseas address of the owner of the vehicle; and

(b) the owner's principal addresses while in Australia and in this State; and

(c) a description of the vehicle that enables its identification; and

(d) details relating to —

(i) the arrival of the vehicle in, and the proposed removal of the vehicle out of, the Commonwealth and the State; and

(ii) the *Triptyque* or *Carnet de passages en douane* relating to the vehicle; and

(iii) the licence granted in respect of the vehicle in the country from which the vehicle is brought to Australia; and

(iv) the Third Party Insurance Policy required to be held in respect of the vehicle.

105. Prescribed standards and requirements

For sections 22(2)(d) and 24(2)(e), the standards and requirements for an overseas vehicle are the standards and requirements set out in Parts 8, 10 and 11 that apply to that kind of motor vehicle.

106. Further information

(1) The CEO may require the applicant to give the CEO, within the time specified by the CEO, any document or information that the CEO requires to determine the application and may require the applicant to verify the information by statutory declaration.

(2) The CEO may refuse to consider an application if the applicant does not comply with a requirement under subregulation (1) within the specified time.

107. Fees for temporary number plates

For section 26(2), the fee for the issue of a temporary number plate or set of temporary number plates is $32.00.

[Regulation 107 amended: Gazette 12 Jun 2015 p. 2039; 14 Jun 2016 p. 1999; 23 Jun 2017 p. 3268; 22 Jun 2018 p. 2191; 31 May 2019 p. 1726; SL 2020/74 r. 9; SL 2021/92 r. 20; SL 2023/43 r. 36; SL 2025/65 r. 15.]

108. Return of temporary plates for overseas vehicles

The owner of an overseas vehicle for which a vehicle licence has been granted under Part 3 of the Act must return all temporary plates issued in respect of the vehicle as soon as practicable after the expiration of the vehicle licence or

immediately before the vehicle leaves Australia, whichever occurs first.

Penalty:

(a) for a first offence, a fine of 4 PU;

(b) for a subsequent offence, a fine of 8 PU.

Modified penalty: 1 PU.

Part 4 — Number plates

Division 1 — Preliminary

109. Terms used

In this Part —

authorised on-demand rank or hail vehicle has the meaning given in the *Transport (Road Passenger Services) Regulations 2020* regulation 3;

authorised passenger transport vehicle means a vehicle in relation to which a passenger transport vehicle authorisation is in force;

eligible vehicle means a licensed vehicle that is not —

(a) a vehicle with a seasonal heavy vehicle licence; or

(b) an authorised on-demand rank or hail vehicle;

imitation plate means —

(a) a replica or imitation of a number plate issued by the CEO or a corresponding authority; or

(b) an article that is so similar to a number plate issued by the CEO or a corresponding authority that it is likely to be confused with such a number plate;

name plate means a name plate issued under regulation 125(1);

on-demand charter vehicle has the meaning given in the *Transport (Road Passenger Services) Regulations 2020* regulation 3;

on-demand rank or hail vehicle has the meaning given in the *Transport (Road Passenger Services) Regulations 2020* regulation 3;

ordinary plate means a number plate issued by the CEO that is not a name plate, personalised plate, special plate or trade plate;

passenger transport service has the meaning given in the *Transport (Road Passenger Services) Act 2018* section 4(1);

passenger transport vehicle has the meaning given in the *Transport (Road Passenger Services) Act 2018* section 4(1);

passenger transport vehicle authorisation has the meaning given in the *Transport (Road Passenger Services) Act 2018* section 4(1);

personalised plates —

(a) in relation to personalised plates issued before 10 June 1988, means reflective plates consisting of no more than 7 characters, the first being a letter and the last being the letter "P";

(b) in relation to personalised plates issued on or after 10 June 1988, means reflective plates consisting of no more than 6 characters, the first being a letter;

reflective plate means a number plate that has —

(a) non-reflective identifying characters superimposed on a reflective background; or

(b) reflective identifying characters superimposed on a non-reflective background;

reserved plate means an ordinary plate, exclusive display rights to which have been allocated under regulation 128A(1) or (2);

special plate means a special plate issued under regulation 125(1);

trade plate means a number plate of a kind mentioned in regulation 132.

[Regulation 109 amended: Gazette 26 Jun 2019 p. 2231; SL 2020/91 r. 14; SL 2021/206 r. 4.]

109A. Passenger transport vehicle authorisations

For the purposes of this Part, if the CEO is satisfied that a passenger transport vehicle authorisation will be granted for a vehicle within a reasonable period, the CEO may treat the

vehicle as if that passenger transport vehicle authorisation were in force.

[Regulation 109A inserted: Gazette 26 Jun 2019 p. 2232.]

110. Power to give exemption or refund in exceptional circumstances

(1) If the CEO is satisfied that exceptional circumstances warrant the refund or exemption being given in a particular case the CEO may, in that case —

(a) refund all or part of a payment that has been made in respect of any fee payable under this Part; or

(b) in writing, exempt a person or class of person from payment of any fee payable under this Part or from payment of part of a fee.

(2) The CEO may, in writing given to a person exempted under subregulation (1)(b), vary or revoke the exemption.

(3) An exemption may be given subject to the conditions imposed by the CEO and specified in the exemption.

(4) A person must not contravene a condition of an exemption.

Penalty for an offence under this subregulation: a fine of 8 PU.

Division 2 — Number plates generally

111. CEO to provide number plates

(1) The CEO must provide and issue number plates for each vehicle that is licensed under Part 2 of the Act.

(2) The CEO must provide and issue number plates for each authorised on-demand rank or hail vehicle that identify the vehicle as an on-demand rank or hail vehicle (whether by use of the word “taxi” or otherwise).

(2A) Number plates issued for an authorised passenger transport vehicle (other than an authorised on-demand rank or hail

vehicle) may, but are not required to, identify the vehicle as a passenger transport vehicle or as a passenger transport vehicle that is used to provide a particular category of passenger transport service.

(2B) Number plates must not be issued identifying a vehicle as a passenger transport vehicle, or as a passenger transport vehicle that is used to provide a particular category of passenger transport service, unless —

(a) a passenger transport vehicle authorisation, or a passenger transport vehicle authorisation that authorises the vehicle to be operated for use in providing that category of passenger transport service, as the case requires, is in force in relation to the vehicle; or

(b) the vehicle is to be operated to replace a vehicle with an authorisation referred to in paragraph (a).

(3) Whether or not a fee or charge is payable or paid under this Part for a number plate, each number plate remains the property of the CEO.

[Regulation 111 amended: Gazette 26 Jun 2019 p. 2232-3.]

112. Fees for issue, reissue, replacement of certain number plates

These fees are payable —

(a) for the issue of ordinary plates except if paragraph (b), (ba), (bb), (bc), (d), (da), (db) or (g) applies — $32.00;

(b) for the issue of plates for an authorised on-demand rank or hail vehicle or plates identifying a vehicle as an on-demand charter vehicle — $32.00;

(ba) for the re-issue of ordinary plates that have been returned under regulation 113(1), (2) or (3) except if paragraph (bb) or (bc) applies (other than plates to replace existing plates bearing the same characters) — $19.40;

(bb) for the re-issue of plates that are issued under regulation 111(2) or that are taken under the *Transport (Road Passenger Services) Regulations 2020* Part 13 Division 2 to be issued by the CEO under regulation 111(2) and that have been returned under regulation 113(1), (2) or (3) or 113A — $19.40;

(bc) for the re-issue of plates identifying a vehicle as an on-demand charter vehicle that are issued under regulation 111(1) or that are taken under the *Transport (Road Passenger Services) Regulations 2020* Part 13 Division 2 to be plates identifying a vehicle as an on-demand charter vehicle issued by the CEO under regulation 111(1) and that have been returned under regulation 113(1), (2) or (3) or 113A — $19.40;

(c) upon application for the issue of personalised plates — $104.60;

(d) upon application for the issue of plates to replace ordinary plates bearing the same characters except if paragraph (da), (db) or (g) applies — $52.10;

(da) for the issue of plates to replace plates that are issued under regulation 111(2) or that are taken under the *Transport (Road Passenger Services) Regulations 2020* Part 13 Division 2 to be issued by the CEO under regulation 111(2) — $52.10;

(db) for the issue of plates to replace plates identifying a vehicle as an on-demand charter vehicle that are issued under regulation 111(1) or that are taken under the *Transport (Road Passenger Services) Regulations 2020* Part 13 Division 2 to be plates identifying a vehicle as an on-demand charter vehicle issued by the CEO under regulation 111(1) — $52.10;

(e) upon application for the issue of plates to replace personalised plates bearing the same characters without the letter “P” previously required by the repealed *Road Traffic (Licensing) Regulations 1975* — $80.50;

(f) upon application for issue of name plates — $1 036.10;

(g) upon application for the issue of special plates, name plates or reserved plates to replace special plates, name plates or reserved plates bearing the same characters —

(i) for premium material plates — $285.00;

(ii) for standard metal plates — $140.70.

[Regulation 112 amended: Gazette 12 Jun 2015 p. 2039; 14 Jun 2016 p. 1999; 23 Jun 2017 p. 3268; 22 Jun 2018 p. 2191-2; 31 May 2019 p. 1726; 26 Jun 2019 p. 2233-4; SL 2020/74 r. 9; SL 2020/91 r. 14; SL 2021/92 r. 20; SL 2021/206 r. 5; SL 2022/67 r. 21; SL 2023/43 r. 37; SL 2024/58 r. 23; SL 2025/65 r. 15; SL 2026/63 r. 12.]

113. Return of number plates

(1) A number plate issued by the CEO for a vehicle must be returned to the CEO by a responsible person for, or other person in possession of, the vehicle —

(a) if the licence is cancelled or a licence holder of the vehicle is disqualified from holding a vehicle licence, as soon as practicable after the cancellation or disqualification; or

(b) if the licence has expired —

(i) in the case of a seasonal heavy vehicle licence, within one year of the expiry of the licence; and

(ii) in any other case, within 3 months of the expiry of the licence.

Penalty:

(a) for a first offence, a fine of 4 PU;

(b) for a subsequent offence, a fine of 8 PU.

Modified penalty: 2 PU.

(2) If a defect notice is in force for a vehicle, the CEO may, by notice served on a responsible person for, or other person in

possession of, that vehicle, require the return of a number plate issued by the CEO for the vehicle within 14 days or a later time specified in the notice and the person upon whom a notice is served must comply with the notice.

Penalty:

(a) for a first offence, a fine of 4 PU;

(b) for a subsequent offence, a fine of 8 PU.

Modified penalty: 2 PU.

(3) The CEO is not to issue personalised plates, special plates or name plates to replace ordinary plates previously issued for a vehicle unless the ordinary plates are returned to the CEO.

(4) The CEO is not to issue ordinary plates to replace personalised plates, special plates or name plates previously issued for a vehicle, or to replace reserved plates being used on a vehicle, unless the plates to be replaced are returned to the CEO, unless subregulation (1) applies.

(5) A responsible person for a vehicle who removes from the vehicle, while it has a current licence, personalised plates, special plates, name plates or reserved plates must obtain a set of ordinary plates from the CEO and affix those plates to the vehicle.

Penalty for an offence under this subregulation:

(a) for a first offence, a fine of 4 PU;

(b) for a subsequent offence, a fine of 8 PU.

Modified penalty for an offence under this subregulation: 1 PU.

[Regulation 113 amended: SL 2021/206 r. 6.]

113A. Return of number plates for passenger transport vehicles

(1) This regulation applies if —

(a) a number plate issued by the CEO identifies the vehicle as a passenger transport vehicle or as a passenger

transport vehicle that is used to provide a particular category of passenger transport service; and

(b) the passenger transport vehicle authorisation for the vehicle, or the passenger transport vehicle authorisation that authorises the vehicle to be operated for use in providing that category of passenger transport service, as the case requires, ceases to be in force.

(2) The number plate must be returned to the CEO by the holder or previous holder of the passenger transport vehicle authorisation for the vehicle, or other person in possession of the vehicle, within 14 days after the authorisation ceases to be in force.

Penalty for this subregulation:

(a) for a first offence, a fine of 8 PU;

(b) for a subsequent offence, a fine of 16 PU.

Modified penalty for this subregulation: 4 PU.

(3) Subregulation (2) does not apply if, within the 14-day period referred to in that subregulation, a passenger transport vehicle authorisation is issued for the vehicle that is consistent with the identification of the vehicle on the number plate.

(4) If the number plate was issued in reliance on regulation 109A, and the passenger transport vehicle authorisation referred to in that regulation has not been granted at the end of a reasonable period after the number plate was issued, this regulation applies as if the passenger transport vehicle authorisation ceased to be in force at the end of that period.

(5) This regulation does not limit regulation 113.

[Regulation 113A inserted: Gazette 26 Jun 2019 p. 2235-6.]

114. Transfer of certain plates

(1) A person to whom a set of special plates or name plates has been issued or who has the exclusive right to display a set of reserved plates may, with the approval of the CEO, and on

payment of a fee of $21.20, transfer those plates to another vehicle owned by the person.

(2) A person to whom a set of personalised plates has been issued may, with the approval of the CEO, and on payment of a fee of $21.20, transfer those plates to another vehicle owned by the person or by a member of the person's immediate family.

(3) The CEO must not approve the transfer of number plates that identify a vehicle as a passenger transport vehicle, or as a passenger transport vehicle that is used to provide a particular category of passenger transport service, unless —

(a) a passenger transport vehicle authorisation, or a passenger transport vehicle authorisation that authorises the vehicle to be operated for use in providing that category of passenger transport service, as the case requires, is in force in relation to the vehicle to which the number plates are proposed to be transferred; or

(b) the vehicle to which the number plates are proposed to be transferred is to be operated to replace a vehicle with an authorisation referred to in paragraph (a).

[Regulation 114 amended: Gazette 12 Jun 2015 p. 2039; 14 Jun 2016 p. 1999; 23 Jun 2017 p. 3268; 22 Jun 2018 p. 2192; 31 May 2019 p. 1726; 26 Jun 2019 p. 2236; SL 2020/74 r. 9; SL 2021/92 r. 20; SL 2021/206 r. 7; SL 2022/67 r. 21; SL 2023/43 r. 38; SL 2024/58 r. 23; SL 2025/65 r. 15; SL 2026/63 r. 12.]

115. Replacement of stolen, lost number plates

(1) If a number plate issued by the CEO for a vehicle is stolen or otherwise lost, a responsible person for the vehicle must, as soon as practicable after becoming aware of that happening, notify the CEO in writing or in any other manner approved by the CEO of that happening.

(2) If a stolen or lost number plate is an ordinary plate (other than a reserved plate) the CEO must, on the return of each other plate in the set that was not stolen or lost and on payment of the relevant fee under regulation 112, issue a replacement set of number plates for the vehicle.

(2A) Despite subregulation (2), if the stolen or lost number plate is a plate issued or taken to be issued under regulation 111(1) that identifies a vehicle as an on-demand charter vehicle, or a plate issued or taken to be issued under regulation 111(2), the CEO must, on the return of each other plate in the set that was not stolen or lost and on payment of the relevant fee under regulation 112, issue a replacement set of number plates for the vehicle either bearing the same characters as those in the returned set or different characters, as the CEO thinks fit.

(3) If a stolen or lost number plate is from a set of —

(a) special plates; or

(b) name plates; or

(ba) reserved plates; or

(c) personalised plates,

the CEO must, on the return of each other plate in the set that was not stolen or lost and on payment of the relevant fee under regulation 112, issue a replacement set of number plates that is of the same type or class, and bearing the same characters, as the set of plates being replaced.

[Regulation 115 amended: Gazette 26 Jun 2019 p. 2237; SL 2021/206 r. 8.]

116. Replacement of dilapidated, damaged number plates

(1) If a number plate issued by the CEO for a vehicle has become dilapidated or is damaged so as to render it illegible, a responsible person for the vehicle must return the plate and each other plate in the set to the CEO.

(2) If the returned set is a set of ordinary plates (other than reserved plates), the CEO must, on payment of the relevant fee under regulation 112, issue a replacement set of number plates either bearing the same characters as those in the returned set or different characters, as the CEO thinks fit.

(3) If the returned set is a set of —

(a) special plates; or

(b) name plates; or

(ba) reserved plates; or

(c) personalised plates,

the CEO must, on payment of the relevant fee under regulation 112, issue a replacement set of number plates that is of the same type or class, and bearing the same characters, as the set of plates being replaced.

[Regulation 116 amended: SL 2021/206 r. 9.]

117. Number plate content, colour

(1) Subject to this regulation and to regulations 125, 127 and 133, number plates issued by the CEO must display the expression "W.A." or "Western Australia" and other words, letters and numerals as the CEO determines.

(2) Number plates issued by the CEO may display a letter or letters approved by the CEO indicating the local government district in which a responsible person for the vehicle resides, together with a numeral or numerals and must in addition have the expression "W.A." or "Western Australia", displayed above the letter or letters, numeral or numerals, or contained in any words displayed under subregulation (1), on the number plate.

(3) Any number plate mentioned in subregulation (2) issued to a responsible person residing in a local government district that is a shire, must have enamelled or painted in the same colour as the lettering and numerals, a circular figure in the shape of a

disc of approximately 38 mm in diameter, between the lettering and the numerals unless the letters on the number plate indicating the district are not duplicated in any other district in which case the CEO may issue a number plate without the circular figure in the shape of a disc.

[Regulation 117 amended: SL 2025/164 r. 5.]

118. Surrender of non-reflective plates

(1) The CEO may, by notice served on a licence holder of a vehicle, require the licence holder to surrender to the CEO any number plates issued by the CEO for the vehicle, other than special plates, specified in the notice that are not reflective plates.

(2) The CEO must issue to a licence holder served with a notice under subregulation (1) a set of reflective plates by way of replacement but only on payment of the relevant fee payable under regulation 112 for the issue of the plates.

(3) The CEO may, by notice served on a licence holder of an interchangeable semi-trailer the licence for which was granted on payment of a reduced fee in accordance with a direction of the CEO under regulation 82, require the licence holder to surrender to the CEO any number plates issued by the CEO for the vehicle and specified in the notice.

(4) The CEO must issue to a licence holder served with a notice under subregulation (3) a set of number plates with the letters “IT” and the word “interchangeable” on the plate by way of replacement but only on payment of the relevant fee payable under regulation 112 for the issue of the plates.

(5) For the purposes of subregulations (1) and (3), and without affecting the *Interpretation Act 1984* section 76, a notice may be served on a licence holder by leaving the notice addressed to the licence holder, without stating the licence holder’s name or address, in, on or attached to the vehicle to which are affixed the number plates to which the notice relates.

(6) A licence holder must, within 14 days after being served with a notice under subregulation (1) or (3) surrender to the CEO the number plates specified in the notice.

Penalty for an offence under this subregulation:

(a) for a first offence, a fine of 4 PU;

(b) for a subsequent offence, a fine of 8 PU.

Modified penalty for an offence under this subregulation: 2 PU.

119. Number plate to be fixed on vehicle

(1) A responsible person for, or a person in charge of, a vehicle must ensure that each number plate issued for the vehicle by the CEO or a corresponding authority is rigidly fixed to the vehicle, kept rigidly fixed to the vehicle and displayed in accordance with the applicable provisions of subregulations (2), (3) and (4).

Penalty:

(a) for a first offence, a fine of 4 PU;

(b) for a subsequent offence, a fine of 8 PU.

Modified penalty: 2 PU.

(2) A number plate issued by the CEO or a corresponding authority for a motor cycle, trailer or jinker must be fixed and kept in a conspicuous place on the back of the vehicle, in an upright position and so that the characters on the plate are clearly visible and legible during the daytime and at night.

(3) If a motor vehicle other than a motor cycle, trailer or jinker has duplicate number plates issued for the vehicle by the CEO or a corresponding authority, one number plate must be fixed and kept in a conspicuous place at the front of the vehicle, and the other must be fixed and kept in a conspicuous place on the back of the vehicle, in an upright position and so that the characters on the plates are clearly visible and legible during the daytime and at night.

(4) A special plate that consists only of the expression “W.A.”, or “Western Australia”, and numerals, must be mounted on the vehicle within a reflective frame supplied by the CEO that provides a border of not less than 10 mm around the perimeter of the special plate.

(5) In subregulations (2) and (3) —

jinker means a vehicle —

(a) with an axle or axle group that is built to support part of a load; and

(b) that is connected to the vehicle in front of it by a pole or cable or the load itself, if any.

120. Preventing effective identification of number plate

(1) In this regulation —

ID prevention state, in relation to a plate on a vehicle, means that —

(a) the plate is bent in a way that prevents the whole or a part of a character on the plate from being read at any time when the vehicle is used or driven; or

(b) the plate’s angle is changed in a way that prevents the whole or a part of a character on the plate from being read at any time when the vehicle is used or driven; or

(c) the plate or any part of the plate is covered, altered or otherwise obscured in a way that prevents the whole or part of a character on the plate from being read at any time when the vehicle is used or driven; or

(d) a character or a part of a character on the plate is covered, altered or otherwise obscured in a way that prevents the whole or part of a character on the plate from being read at any time when the vehicle is used or driven; or

(e) the plate is affected in a way that prevents the whole or part of a character on the plate from being read from one

or more positions, even though the character can be read from one or more other positions, at any time when the vehicle is used or driven;

obscuring device means a device the use or operation of which would result in a plate on a vehicle being in an ID prevention state but does not include —

(a) a tow ball fitted to the rear of a vehicle; or

(b) a bicycle rack fitted to the rear of a vehicle; or

(c) a bicycle carried on a bicycle rack fitted to the rear of a vehicle;

obscuring device action, in relation to a vehicle, means —

(a) installing an obscuring device in or on the vehicle; or

(b) causing an obscuring device to be installed in or on the vehicle; or

(c) otherwise providing an obscuring device for the vehicle;

plate means a number plate or identification tablet issued by the CEO or a corresponding authority;

read, in relation to a plate on a vehicle, means read from the vehicle's exterior.

(2) A responsible person for a vehicle must not allow the vehicle to be used or driven unless the whole of each character on a plate on the vehicle can be read whenever the vehicle is used or driven.

(3) A responsible person for a vehicle must not allow the vehicle to be used or driven if a plate on the vehicle is in an ID prevention state.

(4) A responsible person for a vehicle must not take obscuring device action in relation to the vehicle.

(5) A responsible person for a vehicle must not allow the vehicle to be used or driven if an obscuring device is installed in or on the vehicle or is otherwise provided for the vehicle.

(6) A person in charge of a vehicle must not use or drive the vehicle unless the whole of each character on a plate on the vehicle can be read whenever the vehicle is used or driven.

(7) A person in charge of a vehicle must not use or drive the vehicle if a plate on the vehicle is in an ID prevention state.

(8) A person in charge of a vehicle must not use or drive the vehicle if an obscuring device is installed in or on the vehicle or is otherwise provided for the vehicle.

(9) A person in charge of a vehicle must not use or operate an obscuring device at any time so as to prevent the whole or part of a character on the plate from being read at any time when the vehicle is used or driven.

(10) A person does not commit an offence under subregulation (2), (3), (6) or (7) if the thing that is preventing the whole or part of a character on the plate from being read is —

(a) a tow ball fitted to the rear of the vehicle; or

(b) a bicycle rack fitted to the rear of the vehicle; or

(c) a bicycle carried on a bicycle rack fitted to the rear of the vehicle.

(11) A person does not commit an offence under subregulation (3) or (7) in relation to the covering of a plate or a character if the plate or character is covered by a transparent film or cover that —

(a) is of a type approved by the CEO as being non-reflective; and

(b) bears the name of its manufacturer and its serial or other identification number in a conspicuous place, but not so as to obscure the characters on the number plate; and

(c) is kept clean, in good condition and free from discoloration, heavy scratching and any marking other than those referred to in paragraph (b).

Penalty for an offence under subregulation (2), (3), (4), (5), (6), (7), (8) or (9): a fine of 64 PU.

Modified penalty for an offence under subregulation (2), (3), (4), (5), (6), (7), (8) or (9): 24 PU.

[Regulation 120 amended: Gazette 20 Jan 2017 p. 652.]

121. No painting or interfering with number plates

A person must not paint or otherwise interfere with, or permit any other person to paint or interfere with, a number plate issued for a vehicle by the CEO or a corresponding authority unless the number plate is being —

(a) reinstated to its original condition; or

(b) labelled for compliance with regulation 136, 362(2) or (3), 362B or 362C.

Penalty:

(a) for a first offence, a fine of 4 PU;

(b) for a subsequent offence, a fine of 8 PU.

Modified penalty: 2 PU.

[Regulation 121 amended: SL 2025/164 r. 6.]

122. Seizure of number plates

A police officer may seize and take possession of a number plate that the officer has reasonable grounds to believe —

(a) has not been issued in connection with a current vehicle licence; or

(b) is fixed to a vehicle other than that for which it was issued; or

(c) should have been returned to the CEO under these regulations or a notice under these regulations.

123. Restriction on manufacture, sale or supply of imitation plates

A person must not manufacture, sell or supply an imitation plate in this State except under written authorisation granted by the CEO.

Penalty:

(a) for a first offence, a fine of 4 PU;

(b) for a subsequent offence, a fine of 8 PU.

Modified penalty: 1 PU.

124. Seizure and disposal of imitation plates

(1) A police officer may seize and take possession of —

(a) any imitation plate that the officer has reasonable grounds to believe has been manufactured, sold or supplied contrary to regulation 123; or

(b) any imitation plate that is fixed to a vehicle.

(2) The CEO may, with the approval of a JP, cause an imitation plate seized under this regulation to be destroyed, whether or not any person has been convicted of or charged with an offence under regulation 123 in connection with the plate.

(3) When, or as soon as practicable after, an imitation plate is seized under this regulation, a police officer must serve the owner of the vehicle from which it was seized with a notice that informs the person —

(a) that the plate is liable to be destroyed; and

(b) that the person may make written representations to the CEO in relation to the plate within 10 days after service of the notice.

(4) At any time after the expiration of 14 days from service of the notice under subregulation (3) the CEO may apply to a JP for approval to destroy the imitation plate.

(5) The application must be accompanied by copies of any representations received under subregulation (3)(b) in relation to the plate.

(6) The JP, after considering the application, the representations (if any), and the need (if any) for the plate to be retained for evidentiary purposes, may —

(a) approve of the destruction of the plate; or

(b) direct that the plate be returned to the person from whom it was seized; or

(c) authorise the continued retention of the plate for evidentiary purposes.

(7) A person is not entitled to payment by way of compensation or restitution in respect of the seizure, retention or destruction of an imitation plate under this regulation or court order.

Division 3 — Name plates, special plates and reserved plates

[Heading inserted: SL 2021/206 r. 10.]

125. Name plates or special plates not for certain vehicles

(1) The CEO may issue a number plate that is a special plate or a name plate.

(2) The CEO must not issue a special plate or a name plate for a vehicle with a seasonal heavy vehicle licence.

(3) The CEO must not issue a special plate or a name plate for an authorised on-demand rank or hail vehicle.

[Regulation 125 amended: Gazette 26 Jun 2019 p. 2237.]

126. Special plate content and colour

Special plates may consist of —

(a) a non-reflective plate containing the expression “W.A.” or “Western Australia” in white arranged vertically on

the left of the plate and white numerals arranged horizontally on a black background; or

(b) a unique series consisting of the trade name of a particular make or model of vehicle in black letters on a white reflective background; or

(c) a unique series, other than a unique series mentioned in paragraph (b), consisting of —

(i) a reflective background containing the words, letters, numerals, symbols or logo approved by the CEO in the colours approved by the CEO; or

(ii) reflective words, letters, numerals, symbols or logo on a non-reflective background approved by the CEO in the colours approved by the CEO.

127. Name plate content and colour

Name plates may consist of a reflective background containing the expression “W.A.” or “Western Australia” in blue arranged horizontally at the top of the plate and the number of letters that constitute a name or a combination of name or acronym chosen by the applicant with the approval of the CEO.

128. Disposal of right to display special plates

The CEO may on behalf of the Crown in right of the State dispose of the right to display special plates by public auction or public tender or private treaty.

128A. Reserved plates

(1) If an ordinary plate is for the time being used on an eligible vehicle, the CEO may allocate the exclusive right to display the ordinary plate to the responsible person for that vehicle.

(2) If an ordinary plate is for the time being not used on a vehicle but has previously been used on an eligible vehicle, the CEO may allocate the exclusive right to display the ordinary plate to the person who, immediately before the plate last ceased to be

used on an eligible vehicle, was the responsible person for that vehicle.

(3) With the authorisation of the Treasurer, the CEO may on behalf of the Crown in right of the State seek and receive payment in return for the allocation of an exclusive right under subregulation (1) or (2).

[Regulation 128A inserted: SL 2021/206 r. 11.]

129. Right to display special plates, name plates, reserved plates

(1) The CEO must issue to a person who is entitled to the right to display a special plate, a name plate or a reserved plate a certificate in a form approved by the CEO.

[(2) deleted]

(3) A person who is entitled to the right to display a special plate, a name plate or a reserved plate may transfer that entitlement.

(4) A transfer for the purposes of subregulation (3) must be by instrument in writing in duplicate in a form approved by the CEO and signed by the seller and the buyer.

(5) The seller of a right to display a special plate, a name plate or a reserved plate must, within 14 days of the execution of the instrument of transfer by the seller, lodge with the CEO —

(a) the duplicate of the instrument of transfer of the plate; and

(b) the plate itself if not held by the CEO; and

(c) the certificate issued by the CEO in respect of the right to display the plate.

Penalty:

(a) for a first offence, a fine of 4 PU;

(b) for a subsequent offence, a fine of 8 PU.

Modified penalty: 1 PU.

(6) The buyer of the right to display a special plate, a name plate or a reserved plate must —

(a) provide to the CEO the original instrument of transfer of the right to display the plate; and

(b) either —

(i) nominate an eligible vehicle on which the plate is to be used as a number plate; or

(ii) request the CEO to retain the plate under regulation 131;

and

(c) pay to the CEO the relevant fee under regulation 130 and, if applicable, regulation 131.

(7) The CEO must, if subregulation (6) is complied with, issue to the buyer of the right to display a special plate, a name plate or a reserved plate —

(a) a certificate evidencing the right; and

[(b) deleted]

(c) the plates, unless retained under regulation 131.

[Regulation 129 amended: SL 2021/206 r. 12.]

130. Fees for transfer of right to display special plates, name plates, reserved plates

(1) These fees are payable for the transfer of the right to display a special plate —

(a) single digit numeral special plates — $12 593.20;

(b) 2 digit numeral special plates — $2 519.60;

(c) 3 digit numeral special plates — $1 253.70;

(d) any other number of digit special plates — $250.10;

(e) unique series special plates referred to in regulation 126(b) — $2 519.60;

(f) unique series special plates referred to in regulation 126(c) — $109.00.

(1A) The fee payable for the transfer of the right to display a reserved plate is $109.00.

(2) The fee payable for the transfer of the right to display a name plate is $628.60.

(3) Despite subregulations (1), (1A) and (2), the fee payable for the transfer of the right to display a special plate, a name plate or a reserved plate —

(a) under an agreement or order under the *Family Law Act 1975* (Commonwealth) or the *Family Court Act 1997*, is $25.30; or

(b) to a beneficiary by a trustee or other person in a fiduciary capacity under a trust whether express or implied, is $25.30.

(4) If —

(a) the right to display a special plate, a name plate or a reserved plate is owned by a body corporate; and

(b) the CEO is of the opinion that there has been a significant change in the ownership or control of the body corporate,

the right to display the plate is to be taken to have been transferred and the CEO must require the owner of the right to display the plate to pay the relevant fee under subregulation (1), (1A), (2) or (3) in respect of the transfer.

[Regulation 130 amended: Gazette 12 Jun 2015 p. 2039-40; 14 Jun 2016 p. 1999-2000; 23 Jun 2017 p. 3268-9; 22 Jun 2018 p. 2192; 31 May 2019 p. 1726; SL 2020/74 r. 9; SL 2021/92 r. 20; SL 2021/206 r. 13; SL 2022/67 r. 21; SL 2023/43 r. 39; SL 2024/58 r. 23; SL 2025/65 r. 15; SL 2026/63 r. 12.]

131. Retention of special plates, name plates, reserved plates by CEO

(1) If the person who is entitled to the right to display a special plate, a name plate or a reserved plate on a vehicle does not nominate an eligible vehicle on which the plate is to be used as a number plate the plate must be retained by the CEO.

(2) A fee of $18.10 is payable for the storage of a plate retained by the CEO under subregulation (1).

(3) If the fee due under subregulation (2) remains unpaid 3 years after the plate is accepted for storage by the CEO —

(a) the person's right to display the plate ceases; and

(b) the CEO must give written notice of the cessation to the person by sending it to the address most recently notified by the person to the CEO.

(4) A failure by the CEO to give notice under subregulation (3)(b) does not preserve or revive a person's right to display a plate.

[Regulation 131 amended: SL 2021/206 r. 14.]

Division 4 — Trade plates for unlicensed vehicles

132. Who may be issued trade plates

For section 13(2), the classes of persons who may be issued number plates for use on an unlicensed vehicle are these —

(a) manufacturers of vehicles;

(b) dealers in vehicles;

(c) registered used car dealers;

(d) persons carrying on the business of a repairer of motor vehicles;

(e) persons carrying on the business of transporting motor vehicles on behalf of —

(i) a manufacturer or dealer in new motor vehicles; or

(ii) a registered used car dealer;

(f) vehicle body builders;

(g) persons carrying on any of these kinds of business in relation to vehicles —

(i) window tinting;

(ii) applying graphics or signage;

(iii) installing or repairing audio, security or communications equipment;

(iv) vehicle detailing;

(v) customs brokerage.

133. Trade plate content, colour

The characters on a trade plate must comprise a combination of letters and numerals approved by the CEO, with the expression "W.A." or "Western Australia", above, and the word, "Trade", below that combination and must be enamelled or painted on the plate in the colour and on the background approved by the CEO.

134. Fees for trade plates

(1) These fees are payable for issue of trade plates —

(a) $34.00 for a set of replacement plates bearing the same characters as the set of plates being replaced; and

(b) $28.70 for a set of plates in any other case.

(2) In addition, a deposit of $500.00 is payable in respect of each set of plates.

(3) A fee of $46.90 is payable annually for the use and possession of a set of trade plates.

(4) The fee payable under subregulation (3) must be paid before the start of the year to which it relates.

(5) Subject to subregulation (6) and regulation 135(2)(c), if the person to whom a set of trade plates is issued returns those

plates to the CEO, the CEO must refund to the person the deposit paid in respect of those plates.

(6) If trade plates are not returned to the CEO within 15 days after the end of the period for which the annual fee was last paid in respect of those plates, the CEO is to keep the deposit paid for the plates.

[Regulation 134 amended: Gazette 12 Jun 2015 p. 2040; 14 Jun 2016 p. 2000; 23 Jun 2017 p. 3268-9; 22 Jun 2018 p. 2192; 31 May 2019 p. 1726; SL 2020/74 r. 9; SL 2021/92 r. 20; SL 2022/67 r. 21; SL 2023/43 r. 40; SL 2024/58 r. 23.]

135. Replacement of lost, stolen, dilapidated, damaged trade plates

(1) If a trade plate or a set of trade plates is stolen or otherwise lost, the person to whom that plate or set of plates was issued must, as soon as practicable after becoming aware of that happening, notify the CEO in writing or in any other manner approved by the CEO of that happening in which case —

(a) the CEO is to keep the deposit paid for the plates; and

(b) the CEO must issue a replacement set of trade plates —

(i) on the return of each plate in the set that was not stolen or lost; and

(ii) on payment of a further deposit of $500.00 together with the fee mentioned in regulation 134(1)(b);

and

(c) the annual fee paid in respect of the replaced set of plates must be taken to be the annual fee for the replacement set of trade plates which has already been paid.

(2) If a trade plate has become dilapidated or is damaged so as to render it illegible —

(a) the person to whom the plate was issued must return the plate and each other plate in the set to the CEO; and

(b) the CEO must, on payment of the fee mentioned in regulation 134(1)(a) or (b) (whichever is relevant in the case), issue a replacement set of trade plates either bearing the same characters as the set of plates being replaced or different characters, as the CEO thinks fit; and

(c) in either case the annual fee and the deposit paid in respect of the replaced set of plates must be taken to be the annual fee and the deposit for the replacement set of trade plates which has already been paid.

136. Labels for trade plates

(1) The CEO must, on payment of an annual fee under regulation 134(3), issue in respect of each trade plate an adhesive label to be attached to the plate indicating the month and year in which the annual fee will next become payable in respect of the use and possession of the plate.

(2) The CEO must issue an adhesive label under subregulation (1), without requiring payment of a further annual fee —

(a) for each plate in a replacement set of trade plates issued under regulation 135(1); or

(b) for each replacement trade plate or each plate in a replacement set of trade plates issued under regulation 135(2).

(3) A person must not use or permit to be used on any vehicle a trade plate to which an adhesive label issued under this regulation for the plate is not conspicuously affixed.

Penalty:

(a) for a first offence, a fine of 4 PU;

(b) for a subsequent offence, a fine of 8 PU.

Modified penalty: 1 PU.

(4) A person must not use or permit to be used on any vehicle a trade plate if the period for which the annual fee was last paid for the plate has expired.

Penalty for an offence under this subregulation:

(a) for a first offence, a fine of 4 PU;

(b) for a subsequent offence, a fine of 8 PU.

Modified penalty for an offence under this subregulation: 1 PU.

137. Vehicle standards and requirements for use of trade plates

(1) For section 13(3)(d), a trade plate must not be used on an unlicensed vehicle unless —

(a) the vehicle complies, in every respect, with the standards and requirements set out in Parts 8, 10 and 11 that apply to that kind of motor vehicle; or

(b) the vehicle complies with subregulation (2) even though it does not comply with paragraph (a); or

(c) the vehicle is an agricultural machine that complies with subregulation (3) even though it does not comply with paragraph (a).

Penalty:

(a) for a first offence, a fine of 4 PU;

(b) for a subsequent offence, a fine of 8 PU.

Modified penalty: 1 PU.

(2) A motor vehicle with only a cab and chassis, or that cannot be licensed as of Class A under regulation 34 because it does not have a compliance plate fitted to it or it is not entered on the RAV, must have —

(a) effective steering, brakes and suspension (if fitted); and

(b) a driver's seat situated so that the driver has a full and uninterrupted view of the road and any traffic ahead and on each side of the driver; and

(c) wheels and tyres or rubber tracks; and

(d) mudguards for each wheel or mudflaps for the rear wheels; and

(e) lights at the front and rear; and

(f) reflectors at the rear; and

(g) a means of transmitting power from the engine to the drive wheels; and

(h) a structure that will not fail when the vehicle is used for the purpose for which it was designed.

(3) An agricultural machine that does not comply with the standards and requirements set out in Parts 8, 10 and 11 that apply to that kind of motor vehicle must —

(a) comply with subregulation (2)(a), (b), (c), (f), (g) and (h); and

(b) have lights at the front (if the machine is used in the daytime) and lights at the front and rear (if the machine is used at night); and

(c) be —

(i) not more than 2.5 m wide, 4.3 m high and 12 m long and comply with any applicable requirements of Part 8 Divisions 1, 2 and 3 except for regulations 171 to 178; or

(ii) more than 2.5 m but not more than 3.5 m wide and not more than 4.3 m high and 12 m long and —

(I) comply with each mass, dimension or loading requirement that applies to the vehicle; and

(II) if driven at night on a road, fitted with the lights and reflectors that must be fitted to the vehicle under these regulations and have those lights lit; and

(III) not used on a road within the metropolitan region during peak hours;

or

(iii) more than 3.5 m but not more than 6 m wide and not more than 4.3 m high and 12 m long and —

(I) comply with each mass, dimension or loading requirement that applies to the vehicle; and

(II) not used on a road without the prior written approval of the Commissioner of Main Roads;

or

(iv) more than 4.3 m but not more than 4.6 m high and not used on a road without the prior written approval of each corporation, as defined in the *Electricity Corporations Act 2005* section 3(1), whose property for the transmission and distribution of electricity may be at risk of damage by the vehicle's use on the road.

(4) Regulation 232 does not apply to a motor vehicle bearing trade plates driven on a road if the vehicle complies with the requirements of subregulation (2).

[Regulation 137 amended: SL 2021/81 r. 5.]

138. Purposes of use of vehicle with trade plates

For section 13(3)(d), trade plates may be used on an unlicensed vehicle only if —

(a) the vehicle is driven by or in the presence of, the person to whom the plates were issued (the ***holder***) or an

employee of the holder, or is driven by a person authorised by the holder; ~~or~~and

(b) the vehicle is not, without the special authority of the Minister, used for the purpose of being driven from place to place, for the purpose of seeking a buyer, or advertising or of general demonstration; ~~or~~and

(c) the vehicle is not used to carry goods other than —

(i) goods essential for the operation of the vehicle; or

(ii) goods for the comfort of the person or persons travelling in the vehicle; or

(iii) other vehicles in accordance with paragraph (d)(vii); or

(iv) goods belonging to the holder or a customer of the holder of trade plates being transported to or from the holder or the customer;

~~or~~and

(d) the vehicle is being used for any of these purposes —

(i) trial after completion or repair;

(ii) delivery to or from a manufacturer, dealer or repairer or their agent;

(iii) being driven from the premises of a dealer to that of an intending buyer for the purpose of trial mentioned in subparagraph (i);

(iv) trial by an intending buyer or an agent of the buyer, for an unbroken period not exceeding 24 hours;

(v) delivery to a buyer after sale;

(vi) being driven to or from an inspection station for the purpose of being examined or tested;

(vii) being driven to or from and, if the vehicles have the same owner, carrying another vehicle or

vehicles to or from an Agricultural Show, an Agricultural Field Day or a Motor Show, for the purpose of exhibiting the vehicle or vehicles;

(viii) having its windows tinted;

(ix) having graphics or signage applied;

(x) having audio, security or communications equipment installed or repaired;

(xi) being detailed;

(xii) being driven by a customs broker for the purpose of a brokerage arrangement in relation to the vehicle.

[Regulation 138 amended: SL 2026/204 r. 6.]

139. Trade plate to be fixed on vehicle

Regulation 119 applies to a trade plate as if a trade plate were a number plate for the purposes of that regulation.

140. Seizure of trade plates

A police officer may seize and take possession of a trade plate if the officer has reasonable grounds to believe —

(a) that the plate is being used in a way that does not comply with a requirement specified in writing by the CEO under section 13(2); or

(b) that regulation 136(3) or (4), 137 or 138 has not been, or is not being, complied with in relation to the plate or the vehicle bearing the plate.

Part 5 — Vehicle and engine identification numbers

141. Vehicle identification number

(1) The CEO may assign a VIN to a motor vehicle, trailer or semi-trailer manufactured on or after 1 January 1989, if —

(a) the vehicle does not have a VIN and the CEO is satisfied that a VIN is necessary for identifying the vehicle; or

(b) the vehicle's VIN has been or appears to have been, altered, defaced, obliterated or removed and the CEO is satisfied that a VIN is necessary for identifying the vehicle.

(2) If a VIN is assigned, the owner of the vehicle must ensure —

(a) that the number is marked on the vehicle in the location and in the manner directed by the CEO, having regard to the requirements of regulation 274; and

(b) that upon being stamped, the vehicle is produced to the CEO for inspection of the VIN.

Penalty: for an offence under this subregulation:

(a) for a first offence, a fine of 4 PU;

(b) for a subsequent offence, a fine of 8 PU.

Modified penalty for an offence under this subregulation: 1 PU.

142. Engine identification number

(1) A responsible person for, or a person in charge of, a motor vehicle of which the engine or an engine part, bearing the vehicle's engine identification number, is changed or replaced must, within 7 days after the change or replacement, give to the CEO a notice in writing setting out these things —

(a) the date of the change or replacement of the engine or engine part;

(b) the make and the licence number of the motor vehicle;

(c) the name and address of the responsible person for the motor vehicle;

(d) the engine identification number on the engine or engine part so changed or replaced;

(e) the engine identification number (if any) on the engine or engine part substituted for that changed or replaced;

(f) the name and address of the person from whom the substituted engine or engine part was obtained.

Penalty:

(a) for a first offence, a fine of 4 PU;

(b) for a subsequent offence, a fine of 8 PU.

Modified penalty: 1 PU.

(2) The CEO may assign an engine identification number for a motor vehicle if —

(a) the motor vehicle does not have an engine identification number; or

(b) the motor vehicle's engine identification number has been or appears to have been, altered, defaced, obliterated or removed,

and if the CEO is satisfied that an engine identification number is necessary for identifying the engine of the motor vehicle.

(3) If an engine identification number is assigned, a responsible person for, or a person in charge of, the vehicle must ensure —

(a) that the number is marked on the vehicle in the location and in the manner directed by the CEO, having regard to the requirements of regulation 274; and

(b) that upon being stamped, the vehicle is produced to the CEO for inspection of the number.

Penalty:

(a) for a first offence, a fine of 4 PU;

(b) for a subsequent offence, a fine of 8 PU.

Modified penalty: 1 PU.

(4) A person must not use, or permit any other person to use, a motor vehicle if —

(a) the motor vehicle does not have an engine identification number; or

(b) the motor vehicle's engine identification number has been, or appears to have been, altered, defaced, obliterated or removed.

Penalty:

(a) for a first offence, a fine of 4 PU;

(b) for a subsequent offence, a fine of 8 PU.

Modified penalty: 1 PU.

(5) A person does not commit an offence under subregulation (4) if a person has applied and is waiting for an engine identification number to be assigned for the motor vehicle.

(6) A person must not, without the CEO's written approval —

(a) alter, deface, obliterate or remove an engine identification number; or

(b) mark on or affix to the engine of a motor vehicle any mark, number or letter purporting or intended to be, or that is a colourable imitation of, an engine identification number.

Penalty for an offence under this subregulation:

(a) for a first offence, a fine of 4 PU;

(b) for a subsequent offence, a fine of 8 PU.

Modified penalty for an offence under this subregulation: 2 PU.

[Part 6 (r. 143-145) deleted: Gazette 24 Jun 2016 p. 2343.]

Part 7 — Written-Off Vehicle Register

Division 1 — Preliminary

146. Terms used

In this Part, unless the contrary intention appears —

assessor, in relation to a vehicle, means —

(a) the insurer (if any) of the vehicle; or

(b) an insurer, dealer or wrecker who has possession or control of the vehicle and who is in a position to assess whether the vehicle is a write-off;

dealer means a person —

(a) who carries on any class or description of business that is prescribed in the *Motor Vehicle Dealers (Licensing) Regulations 1974* regulation 8; or

(b) who carries on the business of hiring vehicles, if the right to buy the vehicle is not included in that hiring; or

(c) whose ordinary business is not that of buying or selling vehicles but who carries on or acts in that business only for one or more of these purposes —

(i) for the purpose of the hiring, under a hire-purchase agreement, of the vehicle bought or sold;

(ii) for the purpose of effectuating a security over the vehicle bought or sold;

(iii) for the purpose of the hiring, if the right to buy the vehicle is not included in that hiring, of the vehicle bought or sold;

(iv) for the purpose of disposing of a vehicle acquired by the person in connection with a purpose mentioned in subparagraph (i), (ii) or (iii);

insurer, in relation to a vehicle, means —

(a) a person who insures the vehicle in the course of carrying on a business of insurance; or

(b) if the vehicle is owned by a corporation and is not insured — the corporation;

notifiable, in relation to a vehicle, means notifiable under regulation 149;

repair, in relation to a vehicle, means to repair the vehicle as much as is necessary for the vehicle to comply with the standards and requirements set out in regulations 171 to 178 and Part 10 that apply to that kind of vehicle;

total loss, in relation to a vehicle, has the meaning given in regulation 147;

wrecker means a person who carries on the business of —

(a) destroying or dismantling vehicles, parts of vehicles or vehicle accessories; or

(b) buying and selling vehicles (including substantially destroyed or dismantled vehicles), parts of vehicles or vehicle accessories;

written-off, in relation to a vehicle, has the meaning given in regulation 148.

147. Total loss vehicles

A vehicle is a total loss if an assessor determines that the extent of the damage is such that —

$A \leq B$

where —

A is —

(a) if the vehicle was insured at the time of the event that caused the damage, the value for which the vehicle was insured at the time of that event; or

(b) if the vehicle was not insured at the time of the event that caused the damage, the market value of the vehicle at the time of that event;

B is the cost of repairing the vehicle for use on a road so that it complies with the standards and requirements set out in regulations 171 to 178 and Part 10 that apply to that kind of vehicle, plus the cost of salvage.

148. Written-off vehicles

A vehicle is written-off if it has been damaged by collision, fire, flood, accident, trespass, dismantling, demolition or other event and has been assessed as a total loss by an assessor.

149. Notifiable vehicles

A written-off vehicle is notifiable if —

(a) it is a motor vehicle, motor cycle, trailer or semi-trailer; and

(b) in the case of a motor vehicle, trailer or semi-trailer — the vehicle's MRC does not exceed 4.5 t; and

(c) it was manufactured within the period of 15 years ending on the day on which the damage occurred (if known) or otherwise on the day on which the vehicle was written off.

150. Statutory write-offs

(1) A vehicle is a statutory write-off if —

(a) the vehicle is a total loss; and

(b) an assessor has determined that the vehicle is suitable only for dismantling and processing as scrap.

(2) An assessor who, in accordance with these regulations, is determining whether a vehicle is a statutory write-off must —

(a) conduct tests on the vehicle which enable the condition of the vehicle to be assessed in accordance with the Technical Guide; and

(b) assess the results of those tests in accordance with the Technical Guide.

(3) In subregulation (2) —

Technical Guide means the ~~"New~~ *Damage Assessment Criteria for the Classification of Light Vehicle Statutory Write-~~offs"~~ ~~approved~~ Offs*, Edition 2.0, published by Austroads Ltd ~~ABN~~(ACN 136 812 390) on 16 ~~245 787 323 and published in July 2011~~December 2019.

(4) A notifiable motor cycle, notifiable trailer or notifiable semi-trailer is a statutory write-off if it has sustained —

(a) impact damage, (except scratching) to its suspension; and

(b) structural damage to its frame in 2 or more places.

(5) A notifiable motor cycle is a statutory write-off if it has been fully immersed in salt water for any period or fully immersed in fresh water for more than 48 hours.

[Regulation 150 amended: SL 2026/204 r. 7.]

151. Repairable write-offs

A notifiable vehicle is a repairable write-off if it is not a statutory write-off.

Division 2 — Dealing with notifiable vehicles

152. Notification and marking of write-offs

(1) In this regulation —

compliance time —

(a) for the assessor by whom a vehicle was written off, means 7 days after the day on which the assessment was made; or

(b) for another assessor, means 7 days after the day on which the assessor obtained possession or control of it.

(2) An assessor who is in possession or control of a notifiable vehicle must, before the expiration of the compliance time —

(a) give the CEO a written-off vehicle notice in accordance with regulation 153; and

(b) if the vehicle is a statutory write-off —

(i) attach a written-off warning label to the vehicle in accordance with regulation 154; and

(ii) mark over its identifier in accordance with regulation 155.

Penalty: a fine of 20 PU.

Modified penalty: 4 PU.

(3) However, an assessor who comes into possession or control of a notifiable vehicle is not required to comply with subregulation (2) if the subregulation has already been complied with in relation to the vehicle.

(4) An assessor must not do any of these things unless subregulation (2) has been complied with —

(a) transfer possession of the vehicle or part of it to another person;

(b) wreck or dismantle the vehicle;

(c) separate from the vehicle the part of the vehicle on which its identifier is located.

Penalty for an offence under this subregulation: a fine of 20 PU.

Modified penalty for an offence under this subregulation: 4 PU.

153. Written-off vehicle notices

For the purposes of regulation 152(2)(a), a written-off vehicle notice given by an assessor must include this information —

(a) the assessor's name;

(b) the assessor's residential address, business address, email address, telephone number and fax number (if any);

(c) if the assessor is a body corporate — the name and residential address of an individual authorised by the body corporate to deal with the vehicle;

(d) the vehicle's number plate (if any);

(e) the vehicle's identifier;

(f) the date on or about which the vehicle was damaged (if known), or otherwise the date on which the vehicle was written off;

(g) a detailed description, in a form approved by the CEO, of the nature and location of the damage to the vehicle.

Penalty: a fine of 20 PU.

Modified penalty: 4 PU.

154. Written-off warning labels

(1) For the purposes of regulation 152(2)(b)(i), a written-off warning label must —

(a) be in a form approved by the CEO; and

(b) be attached securely to the frame of the vehicle and as closely as possible to its identifier, but in a position where both the label and the identifier can easily be read without moving or removing the label or any part of the vehicle.

(2) If the written-off warning label becomes obscured, damaged or detached from the vehicle, the assessor who has possession or

control of the vehicle must attach another written-off warning label in accordance with subregulation (1)(b).

Penalty: a fine of 20 PU.

Modified penalty: 4 PU.

(3) A person must not, without reasonable excuse, alter, damage, remove or otherwise interfere with a written-off warning label that has been attached to a vehicle.

Penalty for an offence under this subregulation: a fine of 20 PU.

155. Marking over vehicle identifiers of statutory write-offs

(1) For the purposes of regulation 152(2)(b)(ii), the vehicle's identifier must be marked over by making a mark across it with a chisel or other suitable tool.

(2) The mark must not obscure the vehicle's identifier, but must be deep enough to prevent, as far as possible, the removal of the mark.

Division 3 — Registration of written-off vehicles

156. Written-Off Vehicle Register

(1) The CEO must establish and maintain a Written-Off Vehicle Register in a form determined by the CEO.

(2) The WOVR is part of the register of vehicle licences kept under section 14.

157. WOVR to include particulars of notifiable vehicles

(1) In this regulation —

damaged vehicle means a vehicle that, as a result of being damaged, does not comply with the standards and requirements set out in regulations 171 to 178 and Part 10 that apply to that kind of vehicle;

written-off vehicle notice means a notice under regulation 153.

(2) When the CEO receives a written-off vehicle notice for a notifiable vehicle, the CEO must register the vehicle by entering in the WOVR the particulars included in the written-off vehicle notice.

(3) If there are reasonable grounds for suspecting that a damaged vehicle is a notifiable vehicle but the CEO has not received a written-off vehicle notice for the vehicle, the CEO may register the vehicle by entering in the WOVR any of the particulars listed in regulation 153 that are available for the vehicle.

158. Cancellation of entry in WOVR

(1A) This regulation does not apply to an entry in the WOVR made under regulation 158A(3).

(1) A person may apply to the CEO for cancellation of an entry in the WOVR that relates to a repairable write-off.

(2) An application must —

(a) be made in a form approved by the CEO; and

(b) include particulars of the name and address of the applicant; and

(c) include any particulars required by the CEO to enable the CEO to determine whether the vehicle described in the application is the vehicle to which the entry in the WOVR relates.

(3) The CEO may cancel the entry in the WOVR if satisfied that —

(a) the vehicle described in the application is the vehicle to which the entry relates; and

(b) the vehicle has not at any time sustained damage that would require it to be registered in the WOVR as a statutory write-off under these regulations.

[Regulation 158 amended: SL 2022/16 r. 5.]

158A. WOVR to include information relating to certain NSW written-off heavy vehicles

(1) In this regulation —

relevant information means information of the kind listed in regulation 153.

(2) This regulation applies to a vehicle if the CEO is satisfied that the vehicle is recorded in the register of written-off heavy vehicles (the ***NSW WOHVR***) —

(a) under the *Road Transport Act 2013* (NSW) section 104B(1)(a) as a statutory written-off heavy vehicle; or

(b) under the *Road Transport Act 2013* (NSW) section 104B(1)(b) as a repairable written-off heavy vehicle.

(3) The CEO must register the vehicle by entering in the WOVR any relevant information that is available for the vehicle in the NSW WOHVR.

[Regulation 158A inserted: SL 2022/16 r. 6.]

158B. Cancellation of entry in WOVR of certain repaired and registered NSW written-off heavy vehicles

(1) This regulation applies if —

(a) the CEO entered in the WOVR information relating to a vehicle under regulation 158A(3) because the vehicle was recorded in the register of written-off heavy vehicles under the *Road Transport Act 2013* (NSW) section 104B(1)(b) as a repairable written-off heavy vehicle; and

(b) the CEO is satisfied that the vehicle is recorded in the register of written-off heavy vehicles under the *Road Transport Act 2013* (NSW) section 104B(1)(c) as an inspected written-off heavy vehicle.

(2) The CEO must cancel the entry in the WOVR in respect of the inspected written-off heavy vehicle.

[Regulation 158B inserted: SL 2022/16 r. 6.]

Part 8 — Mass, dimension and loading requirements

Division 1 — Mass requirements

Subdivision 1 — General

159. Mass requirements

(1) This Division sets out, for the definition of ***mass requirement*** in section 3(1), the requirements that relate to the mass of —

(a) a vehicle; or

(b) a vehicle's load; or

(c) a vehicle and its load.

(2) This Division does not apply to a vehicle mentioned in regulation 228(g).

160. Mass requirements for all single vehicles

The total mass of a vehicle and its load must not exceed the vehicle's GVM.

161. Complying buses

In this Division —

approved air suspension system, in relation to a vehicle, means a suspension system in which —

(a) vertical movement between each axle and the body of the vehicle is controlled by variations in the pressure of air in an air spring; and

(b) the proportion of the vehicle's mass that is borne by the air spring remains substantially constant despite variations in the pressure of air in the air spring;

complying bus means a bus —

(a) with 2 or 3 axles and a single steer axle that —

(i) is fitted with a compliance plate in accordance with the *Motor Vehicle Standards Act 1989* (Commonwealth) indicating that the bus was manufactured during or after July 1994; and

(ii) meets the emergency exit specifications in ADR 44; and

(iii) meets the rollover strength specifications in ADR 59; and

(iv) meets the occupant protection specifications in ADR 68; and

(v) is equipped with an approved air suspension system;

or

(aa) with 2 or 3 axles and a single steer axle that —

(i) is entered on the RAV as having been manufactured during or after July 1994; and

(ii) is equipped with an approved air suspension system;

or

(b) that is the subject of a declaration under regulation 162 or a corresponding law.

[Regulation 161 amended: SL 2021/81 r. 6.]

162. Declaring buses to be complying buses

(1) This regulation applies to a bus with 2 or 3 axles and a single steer axle that —

(a) is not fitted with a compliance plate in accordance with the *Motor Vehicle Standards Act 1989* (Commonwealth); or

(b) is fitted with a compliance plate in accordance with that Act but the compliance plate indicates that the bus was manufactured before 1 July 1994; or

(c) is not entered on the RAV as having been manufactured during or after July 1994.

(2) The CEO may declare that a bus equipped with an approved air suspension system is a complying bus for the purposes of these regulations if the CEO is satisfied that the bus meets —

(a) the emergency exit specifications in ADR 44; and

(b) the rollover strength specifications in ADR 59; and

(c) the occupant protection specifications in ADR 68.

[Regulation 162 amended: SL 2021/81 r. 7.]

Subdivision 2 — Heavy vehicles

163. Mass limits for heavy vehicle tyres

The mass on a tyre of a heavy vehicle must not exceed the greatest load capacity determined for the tyre by the manufacturer at a cold inflation pressure that does not exceed —

(a) 825 kPa for a radial ply tyre; or

(b) 700 kPa for any other tyre.

164. Mass limits for heavy vehicle wheels and axles

(1) In this regulation —

retractable axle means an axle with a means of adjustment enabling it to be raised or lowered relative to the other axles in the axle group so that the tyres on the axle do not touch the ground.

(2) For the purposes of this regulation, a retractable axle —

(a) must be taken to be an axle when it is in the lowered position; and

(b) must be taken not to be an axle when it is in the raised position.

(3) The mass on a wheel or axle of a heavy vehicle must not exceed the limit set by its manufacturer.

(4) The mass on an axle group or single axle of a heavy vehicle must not exceed the limit provided for it in the Table.

(5) The mass limit in the Table that applies to a heavy vehicle's axle group that includes a retractable axle must be determined as if the axle did not exist, unless subregulation (6) applies.

(6) A retractable axle is part of an axle group for the purposes of the Table if, when the mass on the group exceeds —

(a) 6 t, in the case of a tandem axle group; or

(b) 11 t, in the case of a tri-axle group,

the tyres on the axle are in contact with the ground and the load-sharing suspension system is operating on each axle (including the retractable axle) and tyre in the group.

(7) The sum of the mass on the axle groups and single axles of a heavy vehicle must not exceed —

(a) in the case of a complying bus without a trailer —

(i) if the complying bus has 2 axles — 16.0 t; and

(ii) if the complying bus has a rear tandem axle group fitted with single tyres on one axle and dual tyres on the other axle — 20.0 t; and

(iii) if the complying bus has a rear tandem axle group fitted with dual tyres on both axles — 22.5 t;

and

(b) in the case of a combination consisting of a complying bus and a trailer — the sum of the mass limit specified for the bus in paragraph (a) and the mass limits of the

axle groups and single axles of the trailer as provided in the Table; and

(c) in any other case — the sum of the mass limits of the axle groups and single axles as provided in the Table.

(8) Subregulation (7) does not apply to a heavy vehicle to which regulation 164A applies.

Table — Mass limits for single axles and axle groups

Description of single axle or axle group	Mass limit (t)
Single axles and single axle groups	
Single steer axle on —	
(a) a complying bus	6.5
(b) any other motor vehicle	6.0
Single axle or single axle group fitted with single tyres with section width of —	
(a) less than 375 mm	6.0
(b) at least 375 mm but less than 450 mm	6.7
(c) at least 450 mm	7.0
Single axle or single axle group fitted with dual tyres on —	
(a) a pig trailer	9.0
(b) a complying bus or a bus licensed to carry standing passengers	10.0
(c) any other vehicle	9.0
Twinsteer axle groups	
Twinsteer axle group without a load-sharing suspension system	10.0

Description of single axle or axle group	Mass limit (t)
Twinsteer axle group with a load-sharing suspension system	11.0
Tandem axle groups	
Tandem axle group fitted with single tyres with section width of —	
(a) less than 375 mm	11.0
(b) at least 375 mm but less than 450 mm	13.3
(c) at least 450 mm	14.0
Tandem axle group fitted with single tyres on one axle and dual tyres on the other axle on —	
(a) a complying bus	14.0
(b) any other vehicle	13.0
Tandem axle group fitted with dual tyres on —	
(a) a pig trailer	16.5
(b) any other vehicle	16.5
Tri-axle groups	
Tri-axle group on a vehicle fitted with single tyres with section width of less than 375 mm on all axles, or single tyres on one or 2 axles and dual tyres on the other axle or axles	15.0
Tri-axle group on a pig trailer with either single tyres with section width of at least 375 mm, dual tyres on all axles or a combination of those tyres	18.0

Description of single axle or axle group	Mass limit (t)
Tri-axle group, on a vehicle other than a pig trailer, with either single tyres with section width of at least 375 mm, dual tyres or a combination of those tyres	20.0
Quad-axle groups	
Quad-axle group fitted with single tyres with section width of less than 375 mm	15.0
Quad-axle group fitted with single tyres with section width of at least 375 mm or dual tyres	20.0

[Regulation 164 amended: SL 2025/20 r. 7.]

164A. Mass limit for heavy vehicle with non-compliant axle configuration

(1) This regulation applies to a heavy vehicle that does not comply with regulation 280.

(2) The sum of the mass on the axle groups and single axles of a heavy vehicle to which this regulation applies must not exceed 32.0 t.

[Regulation 164A inserted: SL 2025/20 r. 8.]

165. Mass limits relating to heavy vehicle axle spacing

(1) In this regulation —

vehicle means —

(a) a heavy vehicle; or

(b) a combination that includes a heavy vehicle.

(2) This regulation applies to a vehicle if, under this Division, the total mass of the vehicle and its load must not exceed 42.5 t.

(3) The mass limits in the Table must not be exceeded in relation to the distances set out in the Table that apply to a vehicle.

(4) Each distance in the Table refers to —

(a) the distance from the centre of any single axle to the centre of any other single axle; or

(b) the distance from the centre of any single axle to the centre of the furthest axle in any axle group; or

(c) the greatest distance between the centres of axles in any axle groups.

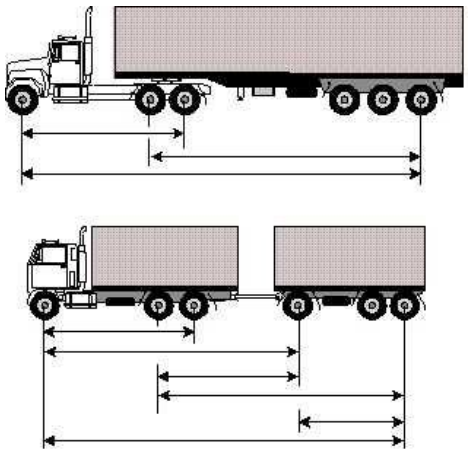

Measurement of distances for the Table

(5) The mass limits in the Table apply to the sum of the mass on each axle group or single axle in the distance mentioned in the Table, including the axles between which the distance is measured.

(6) The total mass of a vehicle and its load must not exceed 15 t if the distance between any 2 axles that are not part of the same axle group is less than 2.5 m.

Table — Mass limits relating to axle spacing

Distance (m)				Mass limit (t)
exceeding		**not exceeding**		
0	—	3.7	.....	23.0
3.7	—	3.8	.....	23.5
3.8	—	4.0	.....	24.0
4.0	—	4.2	.....	24.5
4.2	—	4.3	.....	25.0
4.3	—	4.5	.....	25.5
4.5	—	4.7	.....	26.0
4.7	—	4.8	.....	26.5
4.8	—	5.0	.....	27.0
5.0	—	5.2	.....	27.5
5.2	—	5.3	.....	28.0
5.3	—	5.5	.....	28.5
5.5	—	5.7	.....	29.0
5.7	—	5.8	.....	29.5
5.8	—	6.0	.....	30.0
6.0	—	6.2	.....	30.5
6.2	—	6.3	.....	31.0
6.3	—	6.5	.....	31.5
6.5	—	6.7	.....	32.0
6.7	—	6.8	.....	32.5
6.8	—	7.0	.....	33.0
7.0	—	7.2	.....	33.5

Distance (m)			Mass limit (t)
exceeding		**not exceeding**	
7.2	—	7.3	34.0
7.3	—	7.5	34.5
7.5	—	7.7	35.0
7.7	—	7.8	35.5
7.8	—	8.0	36.0
8.0	—	8.2	36.5
8.2	—	8.3	37.0
8.3	—	8.5	37.5
8.5	—	8.7	38.0
8.7	—	8.8	38.5
8.8	—	9.0	39.0
9.0	—	9.2	39.5
9.2	—	9.3	40.0
9.3	—	9.5	40.5
9.5	—	9.7	41.0
9.7	—	9.8	41.5
9.8	—	10.0	42.0
10.0	—	.....	42.5

166. Mass limits for combinations

(1) In this regulation —

combination means a combination that includes a heavy vehicle.

(2) The total mass of a combination, other than a road train or B-double, and its load, must not exceed 42.5 t.

(3) The loaded mass of a dog trailer or pig trailer must not exceed the loaded mass of the towing vehicle.

(4) The total mass of a combination and its load must not exceed the towing vehicle's GCM.

(5) If the manufacturer of a motor vehicle forming part of a road train or B-double has not determined the GCM of the vehicle, the total mass of the combination and its load must not exceed the amount, in kilograms, equal to A in the formula —

$$A = \frac{K \times M \times R \times T}{16}$$

where —

K is —

(a) 0.055 if a single drive axle is fitted to the motor vehicle; or

(b) 0.053 if a single drive tandem axle group is fitted to the motor vehicle; or

(c) 0.051 if a dual drive tandem axle group is fitted to the motor vehicle;

M is the number of tyre revolutions per km as specified by the tyre manufacturer for the tyres fitted to the driving axle or axles;

R is the overall gear reduction between engine and drive wheels;

T is the maximum engine net torque in N m.

Subdivision 3 — Light vehicles

167. Maximum loaded mass of light vehicles

(1) In this regulation —

motor vehicle means a motor vehicle that is a light vehicle;

trailer means a trailer that is a light vehicle;

vehicle means a light vehicle.

(2) Subject to regulation 168(2), the loaded mass of a trailer or other vehicle that is being towed by a motor vehicle must not exceed —

(a) in the case of a trailer or vehicle equipped with brakes in accordance with Part 10 Division 9 that is being towed by a motor vehicle other than a motor cycle — 1.5 times the unloaded mass of the motor vehicle by which it is being towed; or

(b) in a case to which paragraph (a) does not apply — the unloaded mass of the motor vehicle by which it is being towed.

168. Loaded mass of light trailers

(1) In this regulation —

motor vehicle means a motor vehicle that is a light vehicle;

trailer means a trailer that is a light vehicle.

(2) The loaded mass of a trailer that is being towed by a motor vehicle must not exceed the lesser of —

(a) the towing capacity of the towing apparatus fitted to the vehicle, as specified by the manufacturer of the towing apparatus; or

(b) the maximum loaded mass of a trailer that may be towed by the vehicle, as specified by the manufacturer of the vehicle.

(3) If the towing capacity of the towing apparatus fitted to a motor vehicle is not specified by the manufacturer of the towing apparatus or otherwise cannot be determined, the maximum permitted loaded mass mentioned in subregulation (2)(a) must be taken to be less than the towing capacity of the towing apparatus fitted to the vehicle.

(4) If the maximum trailer mass of a motor vehicle is not specified by the manufacturer of the vehicle or otherwise cannot be determined, the maximum permitted loaded mass mentioned in subregulation (2)(b) must be taken to be —

(a) if the trailer is equipped with brakes in accordance with Part 10 Division 9 — 1.5 times the unloaded mass of the vehicle; or

(b) if the trailer is not so equipped — the unloaded mass of the vehicle.

Division 2 — Dimension requirements

169. Dimension requirements

(1) This Division sets out, for the definition of ***dimension requirement*** in section 3(1), the requirements that relate to the dimensions of —

(a) a vehicle; or

(b) a vehicle's load; or

(c) a vehicle and its load.

(2) This Division does not apply to a vehicle mentioned in regulation 228(g).

170. Dimension requirements for all vehicles

A vehicle and its load must not exceed a size limit set for the vehicle in this Division.

171. Width of certain vehicles

(1A) In this regulation —

safer freight vehicle means a heavy vehicle, other than a trailer or bus, that —

(a) meets the requirements of the following ADRs, so far as they are applicable —

(i) ADR 14/03 or a later version of ADR 14;

(ii) ADR 35/07 or a later version of ADR 35;

(iii) ADR 97;

(iv) ADR 99;

and

(b) if the vehicle has a GVM of more than 8 t — meets the requirements of ADR 105, so far as it is applicable; and

(c) if the vehicle is not a prime mover —

(i) meets the requirements of ADR 106; and

(ii) is fitted with conspicuity markings that comply with the requirements of ADR 13.

(1) A motor vehicle, trailer or any vehicle in a combination must not be over —

(a) if the vehicle is a safer freight vehicle — 2.55 m wide; or

(b) otherwise — 2.5 m wide.

(2) For subregulation (1), the width of a vehicle is measured without taking into account any anti-skid device mounted on wheels, central tyre inflation systems, lights, mirrors, reflectors, signalling devices and tyre pressure gauges.

[Regulation 171 amended: SL 2024/180 r. 4.]

172. Length of motor vehicles

(1) A motor vehicle, except an articulated or controlled access bus, must not be over 12.5 m long.

(2) A controlled access bus must not be over 14.5 m long.

(3) An articulated bus must not be over 18 m long.

173. Length of trailers

(1) On a semi-trailer or a dog trailer —

(a) the distance between the point of articulation at the front of the trailer and the rear overhang line must not be over 9.5 m; and

(b) the distance between the point of articulation at the front of the trailer and the rear of the trailer must not be over 12.3 m.

(2) A projection forward of the point of articulation at the front of a semi-trailer must be contained within a radius of 1.9 m from the point of articulation.

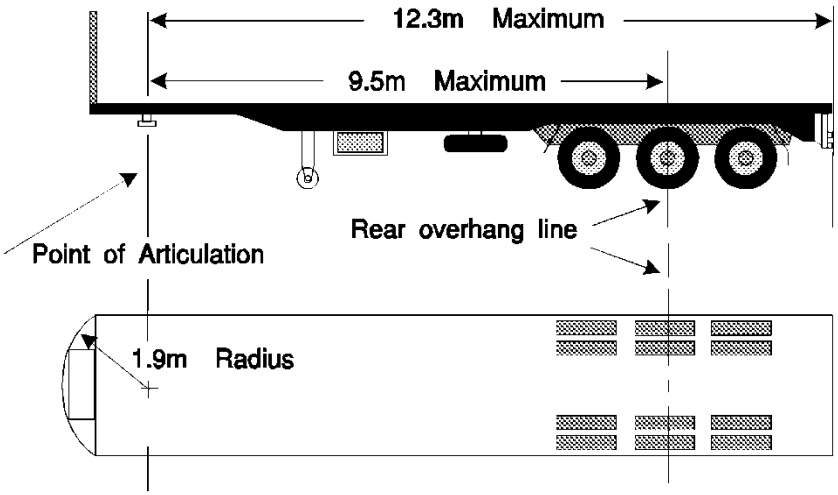

Dimension limits for a semi-trailer

(3) If a semi-trailer has 2 or more points of articulation at the front of the trailer, it must comply with subregulations (1) and (2) when measured at one of the points.

(4) A trailer must not have over 12.5 m of its length available for the carriage of animals if it is —

(a) built to carry cattle, sheep, pigs or horses on 2 or more partly or completely overlapping decks; and

(b) over 4.3 m high.

(5) For subregulation (4), the length available for the carriage of animals on a trailer is measured from the inside of the front wall or door of the trailer to the inside of the rear wall or door of the trailer, with any intervening partitions disregarded.

(6) However, when measuring the length of a trailer with a rounded front, the length is not to include the rounded portion.

174. Length of combinations

(1) A combination must not be over —

(a) for a B-double — 25 m long; and

(b) for a road train — 53.5 m long; and

(c) for a combination, except a road train, designed to carry vehicles on 2 or more partly or completely overlapping decks — 25 m long; and

(d) for another combination — 19 m long.

(2) In a B-double that —

(a) consists of 2 semi-trailers built to carry cattle, sheep, pigs or horses; and

(b) includes at least one semi-trailer over 4.3 m high,

the 2 semi-trailers must not have over 18.8 m of their combined length available for the carriage of animals.

(3) For subregulation (2), the length available for the carriage of animals on a trailer is measured from the inside of the front wall or door of the trailer to the inside of the rear wall or door of the trailer, with any intervening partitions disregarded.

(4) However, when measuring the length of a trailer with a rounded front, the length is not to include the rounded portion.

175. Rear overhang

(1) The rear overhang of a semi-trailer, or dog trailer consisting of a semi-trailer and converter dolly, must not exceed the lesser of —

(a) 60% of the distance between the point of articulation at the front and the rear overhang line; and

(b) 3.7 m.

(2) A semi-trailer with 2 or more points of articulation at the front must comply with subregulation (1) when measured at the same point used for measurement for compliance with regulation 173(3).

(3) The rear overhang of a trailer with only one axle group or single axle (except a semi-trailer) must not exceed the lesser of —

(a) the length of the load-carrying area or body ahead of the rear overhang line; and

(b) 3.7 m.

(4) The rear overhang of a vehicle not mentioned in subregulation (1) or (3) must not exceed the lesser of —

(a) 60% of the distance between the centre line of the front axle and the rear overhang line; and

(b) 3.7 m.

[Regulation 175 amended: Gazette 29 Mar 2019 p. 964.]

176. Trailer drawbar length

(1) The distance between the coupling pivot point on the drawbar of a dog trailer, and the centre line of the front axle group or of the front single axle of the trailer, must —

(a) not be over 5 m; and

(b) not be under 3 m, if the trailer is used in a road train over 19 m long.

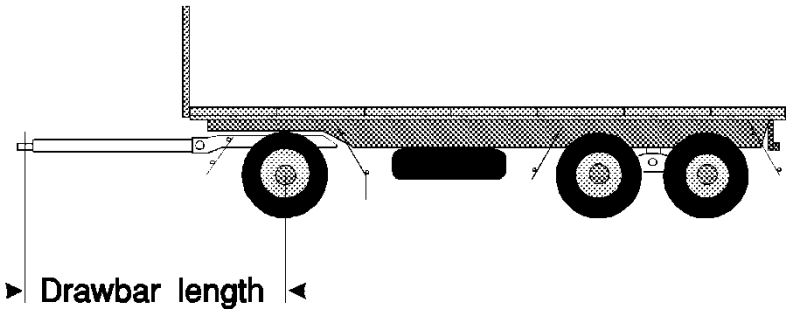

Length of a drawbar on a dog trailer

(2) The distance between the coupling pivot point on a drawbar, and the centre line of the axle group or single axle on a trailer with only one axle group or single axle (except a semi-trailer) must not be over 8.5 m.

[Regulation 176 amended: Gazette 29 Mar 2019 p. 964.]

177. Height of certain vehicles

(1) A motor vehicle, trailer or any vehicle in a combination must not be over 4.3 m high.

(2) However —

(a) a motor vehicle, trailer or any vehicle in a combination built to carry cattle, sheep, pigs or horses must not be over 4.6 m high; and

(b) a double-deck bus must not be over 4.4 m high.

178. Ground clearance of certain motor vehicles

(1) In this regulation —

ground clearance of a vehicle, means the minimum distance to the ground from a point on the underside of the vehicle, except a

point on a tyre, wheel, wheel hub, brake backing plate or flexible mudguard or mudflap of the vehicle.

(2) A motor vehicle must have a ground clearance of —

(a) at least 100 mm at any point within 1 m of an axle; and

(b) at the midpoint between adjacent axles — at least one-thirtieth of the distance between the centre lines of the axles; and

(c) at any other point — at least the distance that allows the vehicle to pass over a peak in the road with a gradient on either side of 1:15, if the wheels of one axle of the vehicle are on the slope on one side of the peak and the wheels of the next axle are on the slope on the other side.

(3) This regulation does not apply to —

(a) a motor vehicle with 3 wheels or fewer; or

(b) a combination that includes a motor vehicle with 3 wheels or fewer.

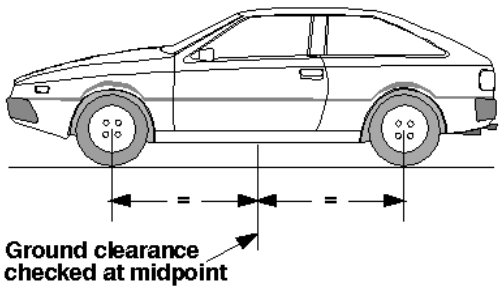

Ground clearance at the midpoint between 2 axles

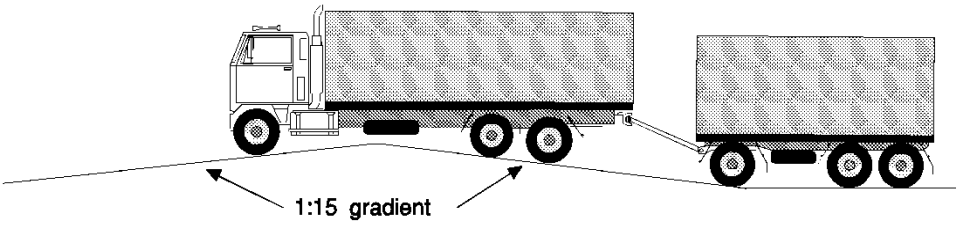

Ground clearance over a peak in the road

[Regulation 178 amended: Gazette 29 Mar 2019 p. 964.]

179. Heavy vehicle size limits

(1) The distance measured at right angles between the rear overhang line of a vehicle and the rear of its load must not exceed the rear overhang that the vehicle is allowed under regulation 175.

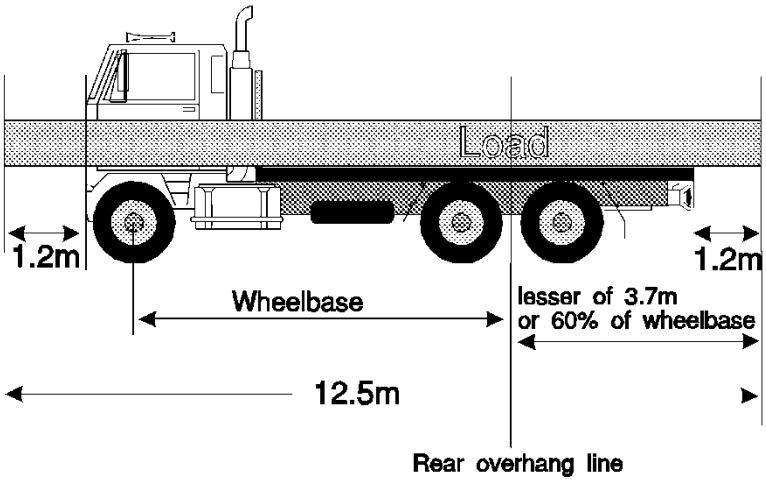

Illustration of —

- **front projection limit; and**
- **rear overhang limit from r. 173 or 175; and**
- **maximum rear projection of load allowed without a warning signal.**

(2) In subregulation (1) —

vehicle means —

(a) a heavy vehicle; or

(b) a combination that includes a heavy vehicle.

(3) Despite subregulation (1) and regulation 170 —

(a) the height of a vehicle that is carrying vehicles on more than one deck, and its load, must not exceed 4.6 m; and

(b) the distance measured at right angles between the rear overhang line of a trailer carrying vehicles on more than one deck and the rear of the rearmost vehicle on the trailer must not exceed 4.9 m.

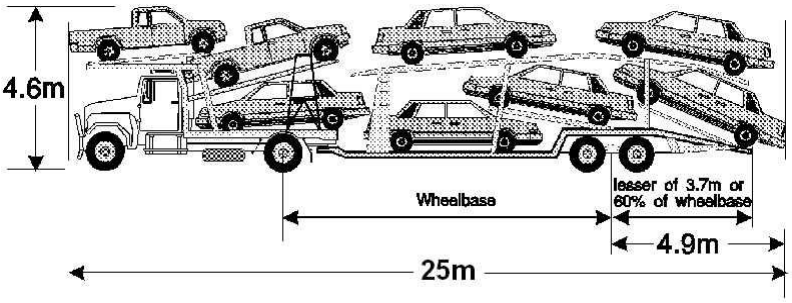

Maximum allowable dimensions of a loaded car carrier

180. Front and side projections of heavy vehicles

(1) In this regulation —

vehicle means —

(a) a heavy vehicle; or

(b) a combination that includes a heavy vehicle.

(2) Subject to regulation 173(2), a load on a vehicle must not project more than 1.2 m in front of the vehicle, or more than 150 mm from the outermost part of either side of it.

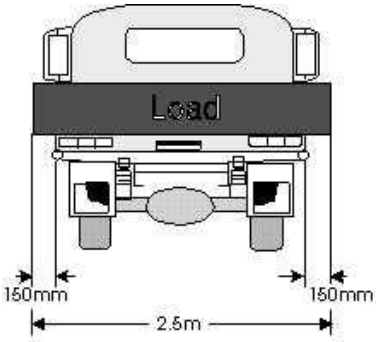

Maximum width limit of vehicle and its load set under r. 171(1)(b), with maximum side projection of load allowed under r. 180

[Regulation 180 amended: SL 2024/180 r. 5.]

181. Warning signals for loads projecting to rear of heavy vehicles

(1) In this regulation —

vehicle means —

(a) a heavy vehicle; or

(b) a combination that includes a heavy vehicle.

(2) The rear of a load on a vehicle must carry a warning signal if the load —

(a) projects more than 1.2 m behind the vehicle; or

(b) projects to the rear of the vehicle so that the end of the load cannot be seen easily from behind; or

(c) is on a pole-type trailer.

(3) In daytime, the warning signal must be a brightly coloured flag or piece of material, with each side at least 300 mm long.

(4) At night-time, the warning signal must be a light showing a clear red light visible at a distance of 200 m.

182. Size and projection of loads of light vehicles

(1) In the case of a light vehicle other than a motor cycle, the load and equipment on the vehicle must not project more than —

(a) 1.2 m in front of the vehicle; or

(b) 1.2 m to the rear of the vehicle.

(2) In the case of a motor cycle, the maximum longitudinal projection beyond the outer extremity of the wheels, of any part of the vehicle, or the load or equipment on the vehicle, must not exceed —

(a) for a motor cycle only —

(i) 150 mm in the case of the front wheel; and

(ii) 300 mm in the case of the rear wheel;

(b) for a motor cycle with an attached sidecar —

(i) 600 mm in the case of the front wheel; and

(ii) 900 mm in the case of the rear wheel.

(3) In the case of a light vehicle, the load and equipment on the vehicle, other than rear vision mirrors and approved signalling devices, must not project more than 150 mm beyond the extreme outer portion of the vehicle on either side.

183. Warning signals for loads of light vehicles

(1) If any portion of the load or equipment on a light vehicle projects in a manner that it would not be readily visible to any person following immediately behind the vehicle, the driver of the vehicle must —

(a) mark the end of the load or equipment, by means of a brightly coloured flag or piece of material, with each side at least 300 mm long, so that it is clearly visible to persons in its vicinity; or

(b) at night-time, fit to the extreme end of the load or equipment a light showing a clear red light to the rear, visible at a distance of 200 m.

(2) Subregulation (1) is not a requirement for the definition of ***warning requirement*** in section 51.

184. Dangerous projection requirement for categories of breach

For the definition of ***dangerous projection requirement*** in section 51, a requirement is that a load on a vehicle must not project in a way that is dangerous to a person or to property, even if all applicable dimension requirements and warning requirements, as mentioned in that definition, are complied with at the relevant time.

185. Warning requirements for categories of breach

For the definition of ***warning requirement*** in section 51, these are requirements —

(a) a requirement specified in an order or permit, as defined in section 32, for a warning sign, light or other device;

(b) a requirement specified in an order or permit, as defined in section 38, for a warning sign, light or other device.

Division 3 — Loading requirements

186. Loading requirements

(1) This Division sets out, for the definition of ***loading requirement*** in section 3(1), the requirements that relate to the placing or securing of a vehicle's load.

(2) This Division does not apply to a vehicle mentioned in regulation 228(g).

187. Placement and securing of loads

(1) In this regulation —

Load Restraint Guide means the document entitled "Load Restraint Guide" Second Edition 2004 and published by the National Transport Commission established by the *National Transport Commission Act 2003* (Commonwealth) section 5.

(2) A load on a vehicle must not be placed in a way that makes the vehicle unstable or unsafe.

(3) In a prosecution for an offence under section 29(1) in relation to the alleged breach of a loading requirement mentioned in subregulation (2), evidence given that the load was not positioned in accordance with the guidelines and performance standards set out in the Load Restraint Guide is prima facie evidence that the placement of the load made the vehicle unstable or unsafe.

(4) A load on a vehicle must be secured in accordance with the guidelines and performance standards for the safe carriage of loads on road vehicles set out in the Load Restraint Guide.

(5) In a prosecution for an offence under section 29(1) in relation to the alleged breach of a loading requirement mentioned in subregulation (2) or (4) a document purporting to be the Load Restraint Guide must, in the absence of any evidence to the contrary, be taken to be the Load Restraint Guide.

Division 4 — Exemption from mass, dimension or loading requirements in emergency areas

188. Exemptions from mass, dimension or loading requirements in emergency areas

(1) The Commissioner of Main Roads may exempt a vehicle or its load or a vehicle and its load from the application of a mass, dimension or loading requirement in an emergency area as defined in the *Emergency Management Act 2005* section 3 if —

(a) the vehicle is being used, or is intended to be used, to protect life or property, or to restore communications or the supply of energy, water or sewerage services; and

(b) the exemption does not present an unreasonable danger to other road users.

(2) The Commissioner of Main Roads may impose conditions on an exemption.

(3) An exemption may be communicated orally to the driver or operator of the vehicle.

(4) The Commissioner of Main Roads must make a written record of each exemption and the conditions to which it is subject.

(5) A person to whom an exemption applies must not contravene a condition imposed on the exemption.

Penalty for an offence under this subregulation: a fine of 16 PU.

189. Notification and reconsideration of emergency area exemption decisions

Part 15 provides for the notification and reconsideration of certain decisions made under regulation 188.

Division 5 — Modification of mass or dimension requirements for certain vehicles

190. Terms used

In this Division —

class 1 vehicle means a vehicle —

(a) in respect of which there is non-compliance with a prescribed requirement that relates to the mass or dimension of the vehicle or its load or the vehicle and its load; and

(b) that is —

(i) a special purpose vehicle; or

(ii) an agricultural machine or agricultural implement; or

(iii) carrying, or designed to carry, a large indivisible item;

and

(c) that is not —

(i) a road train; or

(ii) a B-double; or

(iii) carrying a freight container designed for multi-modal transport;

class 3 vehicle means a vehicle —

(a) in respect of which there is non-compliance with a prescribed requirement that relates to the mass or dimension of the vehicle or its load or the vehicle and its load; and

(b) that is not a class 1 vehicle;

large indivisible item means an item that —

(a) cannot be divided without extreme effort, expense or risk of damage to it; and

(b) cannot be carried on any vehicle without exceeding a mass or dimension requirement;

order has the meaning given in section 32;

permit has the meaning given in section 32.

191. Vehicles for which mass or dimension requirements may be modified

For the definition of ***vehicle*** in section 32 the classes of vehicle are these —

(a) a class 1 vehicle;

(b) a class 3 vehicle.

192. Heavy vehicles that require accredited person before mass or dimension requirement can be modified

The heavy vehicles prescribed for section 33(4) are heavy vehicles used in connection with a business except a vehicle that is —

(a) a bus; or

(b) a vehicle with a GVM of 8 t or less; or

(c) a vehicle owned by a public authority; or

(d) a vehicle owned by the Commonwealth or a Commonwealth department or agency or used for Australian or visiting defence force purposes; or

(e) a special purpose vehicle; or

(f) an agricultural vehicle; or

(g) operated by an operator who will not apply for —

(i) more than 4 single trip permits for one or more vehicles to have effect in the same 12 month period commencing 1 January and ending on 31 December; or

(ii) any other permit for a vehicle.

193. Applications for permits to modify mass or dimension requirement

(1) An application for a permit must be in a form approved by the Commissioner of Main Roads.

(2) An application for a permit must be accompanied by the relevant fee under regulation 197.

194. Permits for transportation of grain to bulk handler

When deciding an application for a permit to modify a mass requirement in relation to the transportation of grain to a bulk handler, the Commissioner of Main Roads must take into account each matter that the bulk handler requires a transporter of grain to comply with as part of the bulk handler's business practices.

195. Additional content of orders, permits

(1) In addition to the things that may be specified in an order under section 35(1), each order must also specify the term during which the modification has effect.

(2) In addition to the things that may be specified in a permit under section 35(1), each permit must also specify these things —

(a) the name and address of the person to whom it was issued;

(b) if the permit is not issued in respect of a specified class — the vehicle licence number of each vehicle to which it applies;

(c) the term during which the modification has effect.

(3) If a permit is issued under section 35(1) in respect of a vehicle that is a motor vehicle made up of a combination of 2 or more vehicles, subregulation (2)(b) is taken to be satisfied if the vehicle licence number of any of the vehicles that make up the combination is specified in the permit.

(4) Subregulation (3) does not apply in relation to the specification in a permit of the vehicle licence number of a converter dolly.

[Regulation 195 amended: SL 2025/20 r. 9.]

196. Applications for variation of modification of mass or dimension requirement

(1) An application for the variation of a modification of a mass or dimension requirement must be in a form approved by the Commissioner of Main Roads.

(2) An application for the variation of a modification of a mass or dimension requirement must be accompanied by the relevant fee under regulation 197.

197. Fees for application for permit, variation

(1) The fee payable for an application for a permit, or for the variation of a permit, for the modification of a mass or dimension requirement for a class 1 vehicle in the case of more

than 1 journey is the total of the applicable amounts set out in paragraphs (a) and (b) —

(a) if the permit is for —

(i) 12 months — $25; or

(ii) 36 months — $50;

(b) in the case of a mass requirement — $4 for each tonne or part of a tonne by which the mass requirement may be exceeded under the permit for each month or part of a month for which the permit is issued.

(2) The fee payable for an application for a permit, or for the variation of a permit, for a class 1 vehicle in the case of a single journey is the total of the applicable amounts set out in paragraphs (a) and (b) —

(a) $25;

(b) one cent per tonne per km (rounded to the nearest 5 cents) of the vehicle and its permitted load.

(3) The fee payable for an application for a permit, or for the variation of a permit, for a class 3 vehicle in the case of more than 1 journey is the total of the applicable amounts set out in paragraphs (a) and (b) —

(a) if the permit is for —

(i) 12 months — $25; or

(ii) 36 months — $50;

(b) in the case of a mass requirement, $4 for each tonne or part of a tonne by which the mass requirement may be exceeded under the permit for each month or part of a month for which the permit is issued.

(4) The Commissioner of Main Roads may, on application by the permit holder, cancel a permit issued under section 34(1)(b) and

refund, in whole or in part, any fee paid in respect of the permit if the Commissioner is satisfied that —

(a) in the case of a permit issued for a single journey — the permit has not been used; or

(b) in the case of a permit issued for more than 1 journey — there are journeys remaining for which the permit may be used.

(5) An application for a cancellation and refund under subregulation (4) must be in a form approved by the Commissioner of Main Roads.

[Regulation 197 amended: SL 2025/20 r. 10.]

198. Variation of order or permit for modification of mass or dimension requirement by Commissioner

(1) The Commissioner of Main Roads may, by order published in the *Gazette*, vary an order for the modification of a mass or dimension requirement if circumstances have changed since the order was made or previously varied.

(2) The Commissioner of Main Roads may, by notice in writing given to the person to whom the permit was issued, vary a permit for the modification of a mass or dimension requirement if circumstances have changed since the permit was issued or previously varied.

[Regulation 198 amended: SL 2025/20 r. 11.]

199. Suspension, cancellation of modification of mass or dimension requirement

(1) The Commissioner of Main Roads may, by notice in writing given to the person to whom a permit was issued, cancel or

suspend the modification of a mass or dimension requirement made by the permit if —

(a) the modification was made on the basis of incorrect or misleading information, whether or not fraud or misrepresentation was involved; or

(b) the Commissioner has reason to suspect that there are grounds on which the Commissioner could, if then considering whether to make the modification, refuse to make it; or

(c) the permit has not been complied with.

(2) The Commissioner of Main Roads may, by order published in the *Gazette*, cancel or suspend the modification of a mass or dimension requirement made by order if —

(a) the modification was made on the basis of incorrect or misleading information, whether or not fraud or misrepresentation was involved; or

(b) the Commissioner has reason to suspect that there are grounds on which the Commissioner could, if then considering whether to make the modification, refuse to make it.

(3) Cancellation or suspension of a modification under subregulation (1) or (2) does not affect the liability of a person to any penalty attributable to anything mentioned in subregulation (1)(a) or (c) or (2)(a).

200. Driver of pilot, escort vehicle to comply with order or permit

If an order or permit requires a vehicle to be accompanied by a pilot vehicle or escort vehicle, the driver of the pilot vehicle or escort vehicle must ensure that there is compliance with each

provision of the order or permit that applies to the pilot vehicle or escort vehicle.

Penalty: a fine of 10 PU.

Modified penalty: 8 PU.

201. Notification and reconsideration of mass or dimension requirement decisions

Part 15 provides for the notification and reconsideration of certain decisions made under Part 4 Division 2 of the Act.

Division 6 — Access restrictions on certain vehicles that comply with mass or dimension requirements

202. Terms used

In this Division each of these terms has the meaning given in section 38 —

access approval

order

permit

road

203. Complying restricted access vehicles

(1) For paragraph (b) of the definition of ***complying restricted access vehicle*** in section 38 a class 2 vehicle cannot be on a road without an access approval.

(2) In subregulation (1) —

class 2 vehicle means a vehicle that is —

(a) a B-double; or

(b) a road train; or

(c) a controlled access bus not more than 14.5 m long; or

(d) a combination carrying vehicles on more than one deck that, together with its load, meets one or both of the ~~these~~following criteria —

(i) its height exceeds 4.3 m but does not exceed 4.6 m;

(ii) its length exceeds 19 m;

or

(e) a vehicle that exceeds 4.3 m, but does not exceed 4.6 m, in height and is built to carry cattle, sheep, pigs or horses.

[Regulation 203 amended: SL 2026/204 r. 8.]

204. Heavy vehicles that require accredited person before access approval can be given

The heavy vehicles prescribed for section 40(2) are heavy vehicles used in connection with a business except a vehicle that is —

(a) a bus; or

(b) a vehicle with a GVM of 8 t or less; or

(c) a vehicle owned by a public authority; or

(d) a vehicle owned by the Commonwealth or a Commonwealth department or agency or used for Australian or visiting defence force purposes; or

(e) a special purpose vehicle; or

(f) an agricultural vehicle; or

(g) operated by an operator who will not apply for —

(i) more than 4 single trip permits for one or more vehicles to have effect in the same 12 month period commencing 1 January and ending on 31 December; or

(ii) any other permit for a vehicle.

205. Applications for access approval by permit

(1) An application for a permit must be in a form approved by the Commissioner of Main Roads.

(2) An application for a permit must be accompanied by the relevant fee under regulation 208.

206. Additional content of orders, permits

(1) In addition to the things that may be specified in an order under section 42(1), each order must also specify the term during which the access approval has effect.

(2) In addition to the things that may be specified in a permit under section 42(1), each permit must also specify these things —

(a) the name and address of the person to whom it was issued;

(b) the vehicle licence number of each vehicle to which it applies;

(c) the term during which the access approval has effect.

(3) If a permit is issued under section 42(1) in respect of a specified complying restricted access vehicle that is a motor vehicle made up of a combination of 2 or more vehicles, subregulation (2)(b) is taken to be satisfied if the vehicle licence number of any of the vehicles that make up the combination is specified in the permit.

(4) Subregulation (3) does not apply in relation to the specification in a permit of the vehicle licence number of a converter dolly.

[Regulation 206 amended: SL 2025/20 r. 12.]

207. Applications for variation of access approvals

(1) An application for the variation of an access approval must be in a form approved by the Commissioner of Main Roads.

(2) An application for the variation of an access approval must be accompanied by the relevant fee under regulation 208.

208. Fees for application for permit, variation

The fee payable for an application for a permit or for the variation of an access approval is —

(a) if the permit is for 12 months — $25; or

(b) if the permit is for 36 months — $50.

209. Variation of access approval on volition of Commissioner

(1) In this regulation —

Main Roads WA website means a website, or a part of a website, controlled and managed by the Commissioner of Main Roads.

(2) The Commissioner of Main Roads may, by order published in the *Gazette* or on the Main Roads WA website, vary a modification of an access approval given by order if circumstances have changed since the order was made or varied.

(3) The Commissioner of Main Roads may, by notice in writing given to the person to whom a permit was issued or published on the Main Roads WA website, vary an access approval given by the permit if circumstances have changed since the permit was issued or varied.

210. Suspension, cancellation of access approvals

(1) The Commissioner of Main Roads may, by notice in writing given to the person to whom a permit was issued, cancel or suspend an access approval given by the permit if —

(a) the access approval was given on the basis of incorrect or misleading information, whether or not fraud or misrepresentation was involved; or

(b) the Commissioner has reason to suspect that there are grounds on which the Commissioner could, if then

considering whether to give the access approval, refuse to give it; or

(c) the permit has not been complied with.

(2) The Commissioner of Main Roads may, by order published in the *Gazette*, cancel or suspend an access approval given by order if —

(a) the access approval was given on the basis of incorrect or misleading information, whether or not fraud or misrepresentation was involved; or

(b) the Commissioner has reason to suspect that there are grounds on which the Commissioner could, if then considering whether to give the access approval, refuse to give it.

(3) Cancellation or suspension of an access approval under subregulation (1) or (2) does not affect the liability of a person to any penalty attributable to anything mentioned in subregulation (1)(a) or (c) or (2)(a).

211. Notification and reconsideration of access approval decisions

Part 15 provides for the notification and reconsideration of certain decisions made under Part 4 Division 3 of the Act.

Division 7 — Accreditation

212. Term used: accredited

In this Division —

accredited means accredited for the purposes of sections 33(4) and 40(2).

213. Who may be accredited

For section 44(2)(b) a person may be accredited in relation to a vehicle if the person is —

(a) an individual who is a responsible person for the vehicle; or

(b) a company given an Australian Company Number under the *Corporations Act 2001* (Commonwealth) who is a responsible person for the vehicle.

214. Standards for ensuring, demonstrating compliance with mass, dimension or loading requirements

(1) For section 44(4)(a) the standards are —

(a) the *Western Australian Heavy Vehicle Accreditation — Mass Management Module Standards* published by Main Roads Western Australia and as amended from time to time; and

(b) the *Western Australian Heavy Vehicle Accreditation — Dimension and Loading Management Module Standards* published by Main Roads Western Australia and as amended from time to time.

(2) If there is any inconsistency between a provision of a road law and the document mentioned in subregulation (1), the provision of the road law prevails to the extent of the inconsistency.

215. Applications for accreditation

(1) An application for a person to be accredited must be in a form approved by the Commissioner of Main Roads.

(2) An application for a person to be accredited must be accompanied by the relevant fee under regulation 218.

216. Accrediting persons on application

(1) A person is not to be accredited unless the Commissioner of Main Roads is satisfied that the person has in place systems that,

to the extent that is reasonably practicable in the circumstances, comply with these documents —

(a) the *Western Australian Heavy Vehicle Accreditation Business Rules* published by Main Roads Western Australia and as amended from time to time;

(b) the *Western Australian Heavy Vehicle Accreditation, Maintenance Management Module Standards* published by Main Roads Western Australia and as amended from time to time;

(c) the *Western Australian Heavy Vehicle Accreditation, Fatigue Management Module Standards* published by Main Roads Western Australia and as amended from time to time.

(2) If there is any inconsistency between a provision of a road law and a document mentioned in subregulation (1), the provision of the road law prevails to the extent of the inconsistency.

217. Applications for renewal of accreditation

(1) An application for a person's accreditation to be renewed must be in a form approved by the Commissioner of Main Roads.

(2) An application for a person's accreditation to be renewed must be accompanied by the relevant fee under regulation 218.

(3) The Commissioner of Main Roads may renew a person's accreditation if satisfied that the person continues to have in place systems that accord with the requirements of section 44(4).

218. Fees for application for accreditation, renewal

The fee payable for an application for a person to be accredited or for a person's accreditation to be renewed is $225.

219. Applications for variation of accreditation

An application for the variation of an accreditation must be in a form approved by the Commissioner of Main Roads.

220. Accreditation duration, certificates

(1) An accreditation, renewal of an accreditation or a variation of an accreditation may have effect for up to 36 months from the day of the accreditation, renewal or variation, as is applicable in the case.

(2) The Commissioner of Main Roads may issue a certificate to an accredited person specifying the duration of the accreditation.

221. Suspension, cancellation of accreditation

(1) The Commissioner of Main Roads may, by notice in writing given to an accredited person, cancel or suspend the person's accreditation if —

(a) the person was accredited on the basis of incorrect or misleading information, whether or not fraud or misrepresentation was involved; or

(b) the Commissioner is not or is no longer satisfied as to a matter mentioned in section 44(4)(a), (b) or (c) in relation to the accredited person; or

(c) the Commissioner has reason to suspect that there are other grounds on which the Commissioner could, if then considering whether to accredit the person, refuse to accredit the person; or

(d) action required to be taken by or on behalf of the accredited person has not been taken; or

(e) a safety-related incident occurs in relation to a vehicle the operation of which is controlled or directed by the person.

(2) Cancellation or suspension of an accreditation under subregulation (1) does not affect the liability of a person to any

penalty attributable to anything mentioned in subregulation (1)(a).

222. Notification and reconsideration of accreditation decisions

Part 15 provides for the notification and reconsideration of certain decisions made under Part 4 Division 4 of the Act.

Part 9 — Miscellaneous prescribed matters

223. Receivers: transport documentation

These persons are declared to be excluded from the definition of ***receiver*** in section 98(1) —

(a) a person who receives or unpacks goods in the performance of a function or the exercise of a power under a law of the State or the Commonwealth;

(b) a person that —

(i) is, or is an employee or agent of, a body prescribed as a Government Business Enterprise under the *Commonwealth Authorities and Companies Regulations 1997* (Commonwealth); and

(ii) receives or unpacks goods for the purposes of the Government Business Enterprise.

224. Previous convictions of MDLR offences under provisions of corresponding law

(1) In this regulation —

HVNL means the Heavy Vehicle National Law, set out in the Schedule to the *Heavy Vehicle National Law Act 2012* (Queensland).

(2) If the HVNL applies as a law of another jurisdiction, a provision of the HVNL that corresponds to a provision mentioned in the definition of ***MDLR offence*** is prescribed for section 122(b).

225. Fee for substitution of vehicle for omnibus

The fee payable before the CEO can give consent for the purposes mentioned in section 130(2) is $1.00.

Part 10 — Standards and requirements for motor vehicles, trailers and combinations

Division 1 — Preliminary

226. Terms used

In this Part —

adopted standard means a standard, except an ADR, that is applied, adopted or incorporated under this Part and, unless the contrary intention appears, a reference to an adopted standard in a regulation or subregulation in this Part is a reference to the standard as in force on 1 November 2002;

ADR (Definitions and Vehicle Categories) means the third edition ADR titled "Vehicle Standard (Australian Design Rule — Definitions and Vehicle Categories) 2005";

air brake means an air-operated or air-assisted brake;

Australian Design Rule (***ADR***) means —

(a) a third edition ADR; or

(b) a second edition ADR;

braking system, of a vehicle, means all the brakes of the vehicle and all the components of the mechanisms by which they are operated;

British Standard means a standard approved for publication on behalf of the British Standards Institution, being an institution established under royal charter in the United Kingdom;

emergency brake means a brake designed to be used if a service brake fails;

emergency vehicle means any of these —

(a) a police vehicle ordinarily used by police officers in the course of carrying out their duties;

(b) a vehicle operated by —

(i) a fire brigade under the *Fire Brigades Act 1942*; or

(ii) a bush fire brigade under the *Bush Fires Act 1954*; or

(iii) the department of the Public Service principally assisting in the administration of the *Fire and Emergency Services Act 1998*,

and ordinarily used by members of the brigade or members of staff of that department in the course of carrying out their duties;

(c) an ambulance;

(d) an emergency vehicle within the meaning of a corresponding law;

(e) a vehicle in respect of which a declaration under regulation 227(a) is in force;

rear fog light means a light used on a vehicle to make it more easily visible from the rear in dense fog;

road tank vehicle has the same meaning as in the ADG Code as defined in *Dangerous Goods Safety (Road and Rail Transport of Non-explosives) Regulations 2007* regulation 4;

school bus means a motor vehicle that —

(a) is equipped to carry more than 8 adult persons; and

(b) is, at the material time, being used to pick up, transport and set down school children; and

(c) is solely or principally used for the purpose mentioned in paragraph (b);

second edition ADR means an Australian Design Rule incorporated in the document described as the Australian Design Rules for Motor Vehicle Safety, Second Edition originally published by the then Commonwealth Department of Transport;

third edition ADR means —

(a) a national standard under the *Motor Vehicle Standards Act 1989* (Commonwealth) as in force immediately before the repeal of that Act; or

(b) a national road vehicle standard, as amended from time to time, under the *Road Vehicle Standards Act 2018* (Commonwealth) section 12;

transport enforcement vehicle means a vehicle in respect of which a declaration under regulation 227(b) is in force;

vacuum brakes means vacuum-operated or vacuum-assisted brakes.

[Regulation 226 amended: Gazette 20 Sep 2016 p. 3982; SL 2021/37 r. 8; SL 2021/81 r. 8; SL 2022/149 r. ~~11~~11; SL 2026/204 r. 9.]

227. Declaration of vehicles as emergency, transport enforcement vehicles

The CEO may, for the purposes of this Part, declare a vehicle, or each vehicle in a class of vehicles, to be —

(a) an emergency vehicle; or

(b) a transport enforcement vehicle.

Division 2 — Application

228. Application

This Part does not apply to any of these vehicles —

(a) a vehicle used only on a railway or tramway;

(b) a vehicle designed to be controlled by a person walking next to it;

(c) a bicycle;

(d) any vehicle (other than a power assisted pedal cycle) propelled by a motor with a maximum power output of not over 200 W;

(e) a motorised wheelchair that cannot travel at over 10 km/h;

(f) an animal drawn vehicle as defined in regulation 390;

(fa) an electric rideable device;

(g) a vehicle used for the purpose of road maintenance or road construction if it is —

(i) situated between traffic signs on a road maintenance or road construction site; and

(ii) operated for, by or under the control of a government department, government instrumentality, statutory authority or local government; and

(iii) fitted with a light displaying intermittent yellow flashes (or flashes of another colour or colours approved by the CEO).

[Regulation 228 amended: SL 2021/199 r. 10.]

229. Non-application of this Part: exemptions

(1) A provision of this Part does not apply to a vehicle if the vehicle is exempt from —

(a) the provision under another law of this State; or

(b) the corresponding provision of the law of another State, a Territory or the Commonwealth.

(2) However, the vehicle is exempt only if all conditions of the exemption (if any) are being complied with.

230. Non-application of this Part: inconsistent ADR requirements

A provision of Divisions 5 to 13 inclusive does not apply to a vehicle if —

(a) the provision is inconsistent with a requirement of a second or third edition ADR applying to the vehicle; and

(b) the vehicle complies with the requirement.

231. Non-application of this Part: approvals under Commonwealth legislation

A provision of Divisions 5 to 13 inclusive does not apply to a vehicle if —

(a) the vehicle does not comply with a requirement of an ADR applying to the vehicle; and

(b) the provision of these regulations corresponds to the requirement of the ADR; and

(c) despite the non-compliance —

(i) before the repeal of the *Motor Vehicle Standards Act 1989* (Commonwealth) an approval was given under section 10A(2) or (3) of that Act to place an identification plate on the vehicle; or

(ii) an approval is given under the *Road Vehicle Standards (Consequential and Transitional Provisions) Act 2018* (Commonwealth) Schedule 3 item 4(2) or 6(2); or

(iii) the vehicle satisfied an entry pathway under the *Road Vehicle Standards Act 2018* (Commonwealth) section 15(2) and the vehicle is entered on the RAV;

and

(d) the vehicle complies with the approval conditions (if any).

[Regulation 231 amended: SL 2021/81 r. 9.]

Division 3 — Offences and penalties

232. Motor vehicles, trailers and combinations to comply with applicable standards and requirements

(1) A person must not drive or use a vehicle unless there is compliance with each provision in this Part that applies to the vehicle or a combination of which the vehicle is a part.

Penalty: a fine of 16 PU.

Modified penalty: 2 PU.

(2) A person must not permit a vehicle to be driven or used unless there is compliance with each provision in this Part that applies to the vehicle or a combination of which the vehicle is a part.

Penalty: a fine of 16 PU.

Modified penalty: 2 PU.

(3) A person does not commit an offence under subregulation (1) or (2) only because the person drives or uses, or permits the driving or use of, a vehicle that is the subject of an offence under regulation 234 or 235.

233. Certain movement of defective vehicles permitted

A person does not commit an offence under regulation 232(1) or (2) in relation to a vehicle if the vehicle —

(a) is being driven in accordance with each defect notice that is in effect for the vehicle; or

(b) cannot be moved, but arrangements for it to be removed from the road are made as soon as practicable; or

(c) is being or has been, as far as practicable, removed from the carriageway for the purpose of repairing it or arranging for it to be removed from the road, and the vehicle is repaired or removed from the road as soon as practicable; or

(d) is being driven directly to a place where it is to be repaired and driving it on the road is unlikely to endanger any person or property; or

(e) is being tested for the purpose of repairing it and driving it on the road is unlikely to endanger any person or property.

234. Tampering with a speed limiting device

If under regulation 363 a vehicle is required to be fitted with a speed limiting device, a person must not tamper with or modify the device so as to cause the vehicle to be capable of being driven at a speed that exceeds 100 km/h.

Penalty: a fine of 20 PU.

Modified penalty: 5 PU.

235. Alteration of vehicles

(1) In this regulation —

alcohol interlock has the meaning given in the *Road Traffic (Authorisation to Drive) Act 2008* section 5A(1);

derivative of a car means a motor vehicle of the same make as a factory produced car and in which the forward part of the body form and the greater part of the mechanical equipment are the same as those in the car.

(2) A person must not, without the approval of the CEO, alter a car or a derivative of a car from —

(a) the manufacturer's specifications; or

(b) its form when it was first licensed, in regard to any part of its construction, equipment or fittings that was effected, manufactured or constructed in accordance with an ADR by making an alteration mentioned in the Table.

Penalty: a fine of 16 PU.

Modified penalty: 2 PU.

Table of alterations requiring approval

	Alteration
1.	Fitting an engine of greater displacement volume than an engine that was available as an option for the vehicle with the same braking system.
2.	Making modifications to braking systems which include the fitting of smaller diameter brake drums, or narrower brake drums or brake shoes which reduce the swept area of braking surface or which reduce the weight of the brake drum or disc.
3.	Fitting any wheel rim with more than a single weld around the circumference, or which does not conform to one of the dimensional standards for wheel rims set down in the Tyre and Rim Standards Manual issued by the Tyre and Rim Association.
4.	Widening the wheel track of front or rear wheels by more than 25 mm beyond the maximum specified by the vehicle manufacturer.
5.	Fitting spacers between wheels and hubs additional to any provided by the vehicle manufacturer.
6.	Fitting wheel nuts which do not engage the thread of the wheel studs for at least the same length as the nuts provided by the vehicle manufacturer, or wheel nuts which do not match with the taper on the wheel.
7.	Fitting tyres other than those appropriate to the wheel rim as specified in the Tyre and Rim Standards Manual issued by the Tyre and Rim Association.
8.	Making modifications to an axle, axles or suspension which reduces the available suspension travel from static conditions to full bump position to less than two-thirds of that provided by the vehicle manufacturer.

	Alteration
9.	Making modifications to an axle, axles or suspension so that any part of the vehicle other than the tyre or rim will contact a road surface in the case of the deflation of any tyre.
10.	Welding or heating any axle, stub axle, steering arm or steering knuckle support.
11.	Lengthening or shortening the chassis frame, or the body structure in the case of a vehicle of mono (chassis-less) construction.

(3) A person must not, without the approval of the CEO, alter a motor vehicle or trailer not being a car or a derivative of a car from —

(a) the manufacturer's specifications; or

(b) its form when it was first licensed, in regard to chassis, frame, wheels, suspension, steering, brakes, axles, engine, body structure or exhaust system.

Penalty: a fine of 16 PU.

Modified penalty: 2 PU.

(3A) Despite subregulations (2) and (3), a person may alter a motor vehicle by installing an alcohol interlock without the approval of the CEO.

(4) If the CEO approves of any modifications under subregulation (2) or (3), a vehicle modification permit must be issued by the CEO, upon receipt by the CEO of a fee of $75.80.

(5) A person must not change or alter the body or equipment of a motor vehicle in a way that adversely affects the safe operation of the vehicle.

Penalty: a fine of 16 PU.

Modified penalty: 2 PU.

(6) A responsible person for a licensed vehicle must, whenever an alteration is made to the vehicle or its equipment affecting the accuracy of any particulars of the description in the licence, give notification of the alteration to the CEO as soon as practicable after the alteration is made.

Penalty: a fine of 16 PU.

Modified penalty: 2 PU.

(6A) On receiving notification under subregulation (6), the CEO may, for the purposes of section 9(1)(c), direct the responsible person for the vehicle to present the vehicle for inspection within 28 days.

(7) A person must not, without the approval of the CEO, remove a compliance plate from a vehicle or deface or modify a compliance plate.

Penalty for an offence under this subregulation: a fine of 16 PU.

Modified penalty for an offence under this subregulation: 2 PU.

[Regulation 235 amended: Gazette 12 Jun 2015 p. 2040; 14 Jun 2016 p. 2000; 20 Sep 2016 p. 3983; 23 Jun 2017 p. 3268-9; 22 Jun 2018 p. 2192; 31 May 2019 p. 1726; SL 2020/74 r. 9; SL 2021/81 r. 10; SL 2021/92 r. 20; SL 2023/43 r. 41; SL 2024/58 r. 23.]

Division 4 — Compliance with Australian Design Rules and adopted standards

236. Compliance with second edition ADRs

(1) In this regulation —

vehicle means a motor vehicle, trailer or combination.

(2) If a second edition ADR recommends that the ADR should apply to the design and construction of a vehicle, the vehicle must comply with the ADR.

(3) If a second edition ADR contains a requirement for a type of equipment fitted to a vehicle built on or after a stated time, any equipment of the same type fitted to the vehicle after it is built must comply with —

(a) the requirement as in force when the vehicle was built; or

(b) if the requirement is amended after the vehicle is built and before the equipment is fitted — the requirement as in force —

(i) when the vehicle was built; or

(ii) when the equipment was fitted; or

(iii) at any time between when the vehicle was built and the equipment was fitted.

(4) However, a vehicle, or equipment fitted to a vehicle, need not comply with a recommendation or requirement of a second edition ADR if —

(a) the recommendation or requirement is replaced by, or is inconsistent with, a requirement of a third edition ADR applying to the vehicle or equipment; and

(b) the vehicle or equipment complies with the requirement of the third edition ADR.

(5) If a second edition ADR allows a vehicle built on or after a stated time to be fitted with equipment, a vehicle built before the time may also be fitted with the equipment.

237. Interpretation of certain second edition ADRs

The words ***left*** and ***right*** in the second edition ADRs have the opposite meaning in the application of the ADRs, in accordance with these regulations, to a motor vehicle with a left-hand drive —

(a) ADR 8 Safety Glass;

(b) ADR 12 Glare Reduction in Field of View;

(c) ADR 14 Rear Vision Mirrors;

(d) ADR 16 Windscreen Wipers and Washers;

(e) ADRs 18 and 18A Location and Visibility of Instruments;

(f) ADRs 35 and 35A Commercial Vehicle Braking Systems.

Note: The Table lists some terms used in the third edition ADRs and the corresponding term used in these regulations.

Third edition ADRs	These regulations
dipped-beam headlamp	low-beam (for a headlight)
front fog lamp	front fog light
rear fog lamp	rear fog light
Wheelguard	mudguard
main-beam headlamp	high-beam (for a headlight)
reversing lamp	reversing light
direction indicator lamp	direction indicator light
stop lamp	brake light
rear registration plate lamp	number plate light
front position (side) lamp	parking light
rear position (side) lamp	tail light
end-outline marker lamp	front or rear clearance light
external cabin lamp	external cabin light
internal lamp	interior light

Third edition ADRs	These regulations
side marker lamp	side marker light
.....	
daytime running lamp	daytime running light
.....	
rear reflex reflector, non-triangular	rear reflector
.....	
front reflex reflector, non-triangular	front reflector
.....	
side reflex reflector, non-triangular	side reflector
.....	

238. Compliance with third edition ADRs

(1) In this regulation —

vehicle means a motor vehicle, trailer or combination.

(2) If a third edition ADR applies to the design and construction of a vehicle, the vehicle must comply with the ADR.

(3) If a third edition ADR contains a requirement for a type of equipment fitted to a vehicle built on or after a stated time, any equipment of the same type fitted to the vehicle after it is built must comply with —

(a) the requirement as in force when the vehicle was built; or

(b) if the requirement is amended after the vehicle is built and before the equipment is fitted — the requirement as in force —

(i) when the vehicle was built; or

(ii) when the equipment was fitted; or

(iii) at any time between when the vehicle was built and the equipment was fitted.

(4) However, a vehicle, or equipment fitted to a vehicle, need not comply with a requirement of a third edition ADR if —

(a) the requirement is replaced by, or is inconsistent with, a requirement of a later version of the ADR applying to the vehicle or equipment; and

(b) the vehicle or equipment complies with the requirement of the later version.

(5) If a third edition ADR allows a vehicle built on or after a stated time to be fitted with equipment, a vehicle built before the time may also be fitted with the equipment.

239. Exception to compliance with ADRs: vehicles that are not road vehicles

A vehicle need not comply with an ADR applied by regulation 236(2) or 238(2) if —

(a) before the repeal of the *Motor Vehicle Standards Act 1989* (Commonwealth) a determination or declaration under section 5B of that Act provided that the vehicle is not a road vehicle for the purposes of that Act; or

(b) a determination under the *Road Vehicle Standards Act 2018* (Commonwealth) section 6(5)(b) or (6)(b) provides that the vehicle is not a road vehicle for the purposes of that Act.

[Regulation 239 inserted: SL 2021/81 r. 11.]

240. Exception to compliance with ADRs: approvals under Commonwealth legislation

(1) A vehicle need not comply with an ADR applied by regulation 236(2) or 238(2) if —

(a) despite non-compliance with the ADR —

(i) before the repeal of the *Motor Vehicle Standards Act 1989* (Commonwealth) an approval was

given under section 10A(2) or (3) of that Act to place an identification plate on the vehicle; or

(ii) an approval is given under the *Road Vehicle Standards (Consequential and Transitional Provisions) Act 2018* (Commonwealth) Schedule 3 item 4(2) or 6(2);

and

(b) the vehicle complies with the approval conditions (if any).

(2) A vehicle need not comply with an ADR applied by regulation 236(2) or 238(2) if —

(a) either —

(i) before the repeal of the *Motor Vehicle Standards Act 1989* (Commonwealth) the vehicle was permitted to be supplied to the market under section 14A(1) of that Act; or

(ii) an approval is given under the *Road Vehicle Standards (Consequential and Transitional Provisions) Act 2018* (Commonwealth) Schedule 3 item 11(2);

and

(b) for a vehicle for which an approval has been given as described in paragraph (a)(i) or (ii) — the vehicle complies with the approval conditions (if any).

(3) A vehicle need not comply with an ADR applied by regulation 236(2) or 238(2) if —

(a) before the repeal of the *Motor Vehicle Standards Act 1989* (Commonwealth) the vehicle was permitted to be used in transport in Australia under section 15(2) of that Act; and

(b) for a vehicle for which an approval has been given under that section — the vehicle complies with the approval conditions (if any).

[Regulation 240 amended: SL 2021/81 r. 12.]

240A. Vehicles satisfying an entry pathway under *Road Vehicle Standards Act 2018* (Commonwealth)

A vehicle need not comply with an ADR applied by regulation 236(2) or 238(2) if —

(a) the vehicle satisfied an entry pathway under the *Road Vehicle Standards Act 2018* (Commonwealth) section 15(2); and

(b) despite non-compliance with the ADR, the vehicle is entered on the RAV.

[Regulation 240A inserted: SL 2021/81 r. 13.]

241. Partial exception to compliance with ADRs: personally imported vehicles

(1) In this regulation —

personally imported vehicle means a vehicle built after 1968 that is imported into Australia by a person who —

(a) owned and used the vehicle for a continuous period of at least 12 months before it was imported into Australia; and

(b) when the vehicle was imported into Australia, was —

(i) an Australian citizen or permanent resident or a person who had applied to become an Australian citizen or permanent resident; and

(ii) old enough to hold a licence or permit to drive the vehicle;

and

(c) within the previous year, had not imported into Australia another vehicle owned by the person; and

(d) has —

(i) if the vehicle was imported before the repeal of the *Motor Vehicle Standards Act 1989* (Commonwealth) — undertaken to comply with any requirements relating to road safety imposed for the vehicle under the *Motor Vehicle Standards Regulations 1989* (Commonwealth); or

(ii) otherwise — complied with the rules made under the *Road Vehicle Standards Act 2018* (Commonwealth).

(2) A personally imported vehicle must be fitted with —

(a) seat belts that are as effective as seat belts that meet an Australian Standard or British Standard for seat belts as in force at 1 November 2002; and

(b) seat belt anchorages that meet the number and location requirements of second or third edition ADR 5; and

(c) child restraint anchorages that meet the number, location, accessibility, thread size and form requirements of second edition ADR 34 or third edition ADR 5 or 34; and

(d) head restraints that meet the number, location and size requirements of second or third edition ADR 22.

(3) However, a personally imported vehicle need only meet the requirements of an ADR mentioned in subregulation (2) if the ADR recommends that it applies or should apply to a vehicle of the same type.

(4) A personally imported vehicle need not otherwise comply with an ADR applied by regulation 236(2) or 238(2).

[Regulation 241 amended: SL 2021/81 r. 14.]

242. Exception to compliance with adopted standards

A vehicle need not comply with an adopted standard if —

(a) the standard is replaced by, or is inconsistent with, a later version of the standard; and

(b) the vehicle complies with the later version of the standard.

Division 5 — General safety requirements

243. Motor vehicles and trailers to be properly maintained

(1) This regulation —

(a) applies to a motor vehicle or trailer whether or not it forms part of a combination; and

(b) does not apply to an agricultural implement.

(2) A motor vehicle must —

(a) be in a condition that enables it to be driven safely; and

(b) be in a condition that is unlikely to occasion unreasonable annoyance to any person or damage to any property; and

(c) have all of its parts in serviceable condition.

(3) Each vehicle forming part of a combination, other than the first or only motor vehicle forming part of the combination must —

(a) be in a condition that enables it to be towed safely; and

(b) be in a condition that is unlikely to occasion unreasonable annoyance to any person or damage to any property; and

(c) have all of its parts in serviceable condition.

(4) A trailer must —

(a) be in a condition that enables it to be towed safely; and

(b) be in a condition that is unlikely to occasion unreasonable annoyance or injury to any person or damage to any property; and

(c) have all of its parts in serviceable condition.

(5) For this regulation, a vehicle is not in a condition that enables it to be driven or towed safely if driving or towing the vehicle would endanger the person driving or towing the vehicle, anyone else in or on the vehicle (or the combination of which it forms part) or other road users.

244. Motor vehicle steering

(1) In this regulation —

motor vehicle means a motor vehicle built or used mainly for the transport of goods or people by road.

(2) A motor vehicle that is a heavy vehicle must have a right-hand drive.

(3) A motor vehicle that is a light vehicle but not a motor cycle must have a right-hand drive unless —

(a) the vehicle is more than 30 years old; or

(b) the vehicle —

(i) is more than 15 years old, but not more than 30 years old; and

(ii) is used solely for personal use.

(4) A motor vehicle has a right-hand drive if the centre of at least one steering control of the vehicle is to the right of, or in line with, the centre of the vehicle.

(5) ~~A~~In relation to a motor vehicle built before 1 January 2005, a component of the steering system of ~~a motor~~the vehicle that is essential for effective steering of the vehicle must be built to transmit energy by mechanical means only.

(6) Failure of a non-mechanical component of the steering system must not prevent effective steering of the vehicle.

[Regulation 244 amended: SL 2026/204 r. 10.]

245. Motor vehicle turning ability

(1) A motor vehicle must be able to turn in a circle not over 25 m in diameter, measured by the outer edge of the tyre track at ground level.

(2) The vehicle must be able to comply with subregulation (1) whether it turns to the left or to the right.

246. Motor vehicles to travel backwards and forwards

A motor vehicle with an unloaded mass over 450 kg must be able to be driven both backwards and forwards when the driver is in the normal driving position.

247. Protrusions to certain vehicles

(1) An object fitted to a motor vehicle, trailer or any vehicle in a combination must be designed, built and fitted to the vehicle in a way that minimises the likelihood of injury to a person making contact with the vehicle.

(2) However, subregulation (1) does not apply to an object fitted to a motor vehicle, trailer or any vehicle in a combination if —

(a) the vehicle was designed before 1965 and the object was part of the design of the vehicle; or

(b) the object was fitted to the vehicle before 1965 in accordance with the law of the place where the object was fitted.

248. Motor vehicle view and controls

A motor vehicle must be built —

(a) to allow the driver a view of the road and of traffic to the front and sides of the vehicle so the driver can drive the vehicle safely; and

(b) with its controls located so the driver can drive the vehicle safely.

249. Seating

A seat for a driver or passenger in a vehicle must be securely attached to the vehicle.

250. Mudguards and spray suppression for certain vehicles

(1) A motor vehicle, trailer or any vehicle in a combination must have firmly fitted a mudguard for each wheel or for adjacent wheels.

(2) Subregulation (1) does not apply to a vehicle if —

(a) the construction or use of the vehicle makes the fitting of mudguards unnecessary or impracticable; or

(b) the body or part of the body of the vehicle acts as a mudguard.

(3) A mudguard fitted to a heavy vehicle must, when the wheels of the vehicle are in position to move straight ahead —

(a) reduce the danger of a person contacting the moving wheels; and

(b) for the rear wheels —

(i) cover the overall tyre width of the wheel or wheels to which it is fitted; and

(ii) be fitted so the height above ground level of the lowest edge of the rear of the mudguard is not over one-third of the horizontal distance between the edge and the centre of the rearmost axle.

(4) However, a mudguard may be up to —

(a) 230 mm above ground level; or

(b) on a vehicle built to be used off road — 300 mm above ground level.

(5) The outside of a rear mudguard, except a mudflap, of a motor vehicle, trailer or any vehicle in a combination that can be seen from the rear of the vehicle must be coloured white or silver if the vehicle —

(a) is at least 2.2 m wide; and

(b) has a body the vertical measurement of which is under 300 mm at the rear, measured from the lowest point of the body above ground level to the highest point; and

(c) is not fitted with rear marking plates in accordance with regulation 328.

(6) For subregulation (5)(a), the width of a vehicle is measured disregarding any anti-skid device mounted on wheels, central tyre inflation systems, lights, mirrors, reflectors, signalling devices and tyre pressure gauges.

251. Motor vehicle horns, alarms

(1) A motor vehicle must be fitted with at least one horn or other device that can give sufficient audible warning to other road users of the approach or position of the vehicle.

(2) A motor vehicle must not be fitted with a device that can make a sound —

(a) like the sound of a siren, bell, exhaust whistle or compression whistle; or

(b) alternating between different tones or frequencies on a regular time cycle.

(3) Subregulation (2) does not apply to —

(a) an emergency vehicle; or

(b) a transport enforcement vehicle; or

(c) an Australian Protective Service vehicle; or

(d) an Australian Border Force vehicle; or

(e) an Airservices Australia vehicle; or

(f) a vehicle at least 25 years old that is fitted as an emergency vehicle if —

(i) the vehicle is used for exhibition purposes; or

(ii) it is part of a collection of former emergency vehicles;

or

(g) an anti-theft alarm if the alarm cannot be operated while the vehicle's ignition is on.

(4) A motor vehicle may be fitted with a device that —

(a) emits a regular, intermittent sound while the vehicle is reversing or in reverse gear; and

(b) is not louder than is necessary so the driver, and a person near the vehicle, can hear the device when it is operating.

[Regulation 251 amended: Gazette 29 Mar 2019 p. 964.]

252. Motor vehicle rear vision mirrors

(1) A rear vision mirror or mirrors must be fitted to a motor vehicle as required by this regulation so that a driver of the vehicle can clearly see by reflection the road behind the vehicle and any following or overtaking vehicle.

(2) At least one rear vision mirror must be fitted to these vehicles —

(a) a car;

(b) a motor tricycle with 2 front wheels;

(c) a motor cycle, or motor tricycle with one front wheel, built before July 1975.

(3) At least one rear vision mirror must be fitted to each side of these vehicles —

(a) a motor vehicle with a GVM of more than 3.5 t;

(b) a motor cycle, or motor tricycle with one front wheel, built after June 1975.

(4) A motor vehicle with a GVM of 3.5 t or less (except a motor vehicle mentioned in subregulation (2) or (3)) must be fitted with —

(a) at least one rear vision mirror on the right side of the vehicle; and

(b) at least one rear vision mirror on the left side of the vehicle or inside the vehicle.

(5) A rear vision mirror fitted to a motor vehicle with a GVM of more than 3.5 t must not project beyond the widest part of the vehicle (excluding lights, signalling devices and reflectors) —

(a) over 230 mm if it can fold to project not over 150 mm beyond the widest part; or

(b) otherwise, over 150 mm.

253. Surfaces of rear vision mirrors

(1) A rear vision mirror required to be fitted to the side of a motor vehicle with a GVM of more than 3.5 t must have a reflecting surface of at least 150 cm^2.

(2) The reflecting surface of a rear vision mirror that is required to be fitted to a motor cycle or moped must —

(a) each be of the same curvature; and

(b) if convex, be part of a notional sphere with a radius of at least 1.2 m.

(3) A motor vehicle may be fitted with additional rear vision mirror surfaces that are flat or convex or a combination of flat and convex surfaces.

254. Motor vehicle automatic transmission

(1) This regulation applies only to a motor vehicle with 4 or more wheels.

(2) A motor vehicle fitted with an automatic transmission must have an engine starter mechanism that cannot operate when the transmission control is in a position to drive the vehicle.

(3) A motor vehicle built after 1975 that is fitted with an automatic transmission must have an indicator in the driver's compartment showing the transmission control position.

255. Motor vehicle diesel engines

A motor vehicle propelled by a diesel engine must be fitted with a device preventing the engine from being started accidentally or inadvertently.

[Regulation 255 amended: Gazette 29 Mar 2019 p. 964.]

256. Motor vehicle bonnet securing devices

(1) A motor vehicle with a moveable body panel forward of the windscreen that covers an engine or luggage storage or battery compartment, must have a device to secure the panel.

(2) If the panel opens from the front in a way that partly or completely obstructs the driver's forward view through the windscreen, the panel must have primary and secondary devices to secure the panel.

257. Electrical wiring, connections and installations in various vehicles

(1) The wiring of electrical equipment of a motor vehicle, trailer or any vehicle in a combination, except the high tension ignition wiring, must —

(a) be supported at intervals of not over 600 mm, unless the vehicle is a pole-type trailer with a pole with an adjustable length, or an extendible trailer; and

(b) be insulated at each of its joints; and

(c) be located where it cannot —

(i) become overheated; or

(ii) contact moving parts; or

(iii) come near enough to the fuel system to be a fire hazard;

and

(d) be protected from chafing.

(1A) The electrical components of a vehicle must be securely mounted.

(2) The electrical connectors between motor vehicles and trailers, for the operation of the vehicle lights required by this Part, must comply with —

(a) AS 2513-1982 *Electrical Connections for Trailer Vehicles*; or

(b) International Standards Organisation ISO 1185 — 1997; or

(c) Society of Automotive Engineers SAE J 560 — 1998; or

(d) AS 4735-2003 *Heavy road vehicles — Electrical connectors for articulated vehicles*.

(3) A trailer must be equipped with an electrical conductor, independent of the trailer coupling, that provides a return path between the electrical circuits of the trailer and towing vehicle.

(4) The electrical wiring, connections and installations of a semi-trailer, dog trailer or converter dolly used in a road train over 19 m long after June 1998 must comply with third edition ADR 63, whether or not it was built before the date stated in the ADR for vehicles of that type.

[Regulation 257 amended: Gazette 29 Mar 2019 p. 965.]

258. Motor vehicle TVs, VDUs

(1) A television receiver or visual display unit must not be installed in or on a motor vehicle so any part of the image on the screen is visible to the driver from the normal driving position.

(2) However, subregulation (1) does not apply to —

(a) a television receiver or visual display unit that cannot be operated when the vehicle is moving; or

(b) a driver's aid in any vehicle or a destination sign in a bus.

(3) A television receiver, or visual display unit, and its associated equipment in or on a motor vehicle must be securely mounted in a position that —

(a) does not obscure the driver's view of the road; and

(b) does not impede the movement of a person in the vehicle.

258A. Motor vehicle windscreen to be fitted

A motor vehicle (other than a motor cycle, a motor tricycle or a moped) must be fitted with a windscreen if it is manufactured or designed to have a windscreen.

[Regulation 258A inserted: Gazette 29 Mar 2019 p. 965.]

259. Motor vehicle windscreens and windows

(1) In this regulation —

approved material means material with the same characteristics as material mentioned in any of these standards —

(a) AS R1-1965 *Safety Glass for Land Transport*;

(b) AS R1-1968 *Safety Glass for Land Transport*;

(c) AS 2080-1977 *Safety Glass for Vehicles*;

(d) British Standard BS 857:1967 *Specification for Safety Glass for Land Transport*;

(e) British Standard BS 5282:1975 *Specification for Road Vehicle Safety Glass*;

(f) British Standard BS AU178:1980 *Specification for Road Vehicle Safety Glass*;

(g) Japanese Industrial Standard JIS R 3211-1979 *Safety Glasses for Road Vehicles*;

(h) American National Standard ANSI Z26.1-1980 *Safety Code for Safety Glazing Materials for Glazing Motor Vehicles Operating on Land Highway*;

transparent material does not include any coating added to the windscreen, window or partition after its manufacture.

(2) Transparent material used in a windscreen, window or an interior partition, of a motor vehicle must be of approved material if —

(a) the vehicle was built after June 1953; or

(b) the material was first fitted to the vehicle after June 1953.

[Regulation 259 amended: Gazette 29 Mar 2019 p. 965.]

260. Motor vehicle window tinting

(1) In this regulation —

glazing —

(a) means material that may be used in a windscreen, window or interior partition of a motor vehicle, through which the vehicle's driver can see the road; but

(b) does not include a coating added after manufacture of the material;

luminous transmittance, for glazing or a coating on glazing, means the amount of light that can pass through the glazing as a percentage of the amount of light that would be transmitted if the glazing or coating were absent;

rear glazing, for a motor vehicle, means glazing used in a window or interior partition of the motor vehicle located behind the driver in the normal driving position.

(2) Glazing used in a windscreen of a motor vehicle must have a luminous transmittance of at least 70%.

(3) Glazing used in a windscreen of a motor vehicle must not be coated in a way that reduces its luminous transmittance.

(4) Subregulations (2) and (3) do not apply to the greater of the following areas of a windscreen —

(a) the area above the highest point of the windscreen that is swept by a windscreen wiper;

(b) the upper 10% of the windscreen.

(5) Glazing used in a window or interior partition of a motor vehicle must have a luminous transmittance of at least 70%.

(6) Glazing used in a window or interior partition of a motor vehicle, other than rear glazing, may be coated to achieve a luminous transmittance of not less than 35%.

(7) If a motor vehicle is fitted with at least 1 rear vision mirror to each side of the vehicle, the motor vehicle's rear glazing may be coated to achieve a luminous transmittance of at least 20%.

(8) If all of the following apply to a motor vehicle, the motor vehicle's rear glazing may be coated to achieve a luminous transmittance of 0% or more —

(a) the vehicle is fitted with at least 1 rear vision mirror to each side of the vehicle;

(b) the vehicle is designed primarily for the carriage of goods;

(c) the vehicle has —

(i) at least 4 wheels; or

(ii) at least 3 wheels and a GVM of more than 1 tonne.

(9) The requirements about luminous transmittance applying to glazing used in a window of a motor vehicle set out in a second edition ADR or third edition ADR do not apply to a window that has been coated as provided in subregulation (6), (7) or (8).

(10) Glazing used in a windscreen, window or interior partition of a motor vehicle that has been coated to reduce its luminous transmittance must not have a reflectance of more than 10%.

[Regulation 260 inserted: Gazette 29 Mar 2019 p. 965-6.]

261. Motor vehicle windscreen wipers and washers

(1) A motor vehicle with 3 or more wheels that is fitted with a windscreen must be fitted with at least one windscreen wiper unless a driver in a normal driving position can obtain an adequate view of the road ahead of the motor vehicle without looking through the windscreen.

(2) At least one windscreen wiper fitted to the motor vehicle must —

(a) be able to remove moisture from the part of the windscreen in front of the driver to allow the driver an adequate view of the road ahead of the motor vehicle when the windscreen is wet; and

(b) be able to be operated from a normal driving position; and

(c) for a motor vehicle built after 1934 — continue to operate until the wiper is switched off; and

(d) for a motor vehicle built after 1959 the driving position of which is nearer one side of the vehicle than the other —

(i) be able to remove moisture from the part of the windscreen in front of the driver, and a corresponding part of the windscreen on the other side of the centre of the motor vehicle, to allow the driver an adequate view of the road ahead of the motor vehicle when the windscreen is wet; and

(ii) if the windscreen wipers are operated by engine manifold vacuum — be provided with a vacuum reservoir or pump to maintain the efficient operation of the wiper or wipers while the vehicle is in motion.

(3) If a motor vehicle was built after 1982 and is a heavy vehicle, it must also be fitted with a windscreen washer that can direct water onto the windscreen within the area swept by a windscreen wiper so the wiper can spread the water to all of the area swept by the wiper.

(4) A windscreen washer of a motor vehicle must be able to be operated from a normal driving position.

262. Size and capacity of wheels and tyres of certain vehicles

The wheels and tyres fitted to an axle of a motor vehicle, trailer or any vehicle in a combination must be of sufficient size and capacity to carry the part of the vehicle's gross mass transmitted to the ground through the axle.

263. Pneumatic tyres for certain vehicles

A motor vehicle, trailer or any vehicle in a combination that was built after 1932 must be fitted with pneumatic tyres.

264. Pneumatic tyres for vehicles

(1) A vehicle must not have pneumatic tyres of different carcass construction fitted to the same axle, but the tyres may have different cord materials and a different number of plies.

(2) Subregulation (1) does not apply to a tyre being used in an emergency as a temporary replacement for a tyre complying with the subregulation.

[Regulation 264 amended: Gazette 29 Mar 2019 p. 967.]

265. Tyres for use on heavy vehicles

(1) This regulation applies to a heavy vehicle instead of the tyre speed category requirements in the relevant ADR.

(2) A tyre fitted to a heavy vehicle must be suitable for road use at the lesser of these speeds —

(a) 100 km/h;

(b) the vehicle's top speed.

266. Size and capacity of pneumatic tyres of certain vehicles

(1) In this regulation —

radial ply tyre means a radial ply tyre within the meaning of the ADR ~~titled "Vehicle Standard (Australian Design Rule —~~ (Definitions and Vehicle Categories~~) 2005".~~).

(2) The wheels and tyres fitted to an axle of a vehicle must be of sufficient size and capacity to carry the part of the vehicle's gross mass transmitted to the ground through the axle.

(3) For the purposes of subregulation (1), the size and capacity of a pneumatic tyre to be fitted to a vehicle must be decided using a cold inflation pressure that is not more than the lesser of —

(a) the pressure recommended by the tyre manufacturer; and

(b) a pressure of —

(i) for a radial ply tyre — 825 kPa; or

(ii) for another tyre — 700 kPa.

[Regulation 266 inserted: Gazette 29 Mar 2019 p. ~~967~~967; amended: SL 2026/204 r. 11.]

267. Tyres defects of certain vehicles

A tyre fitted to a motor vehicle, trailer or any vehicle in a combination must be free of any apparent defect that could make the vehicle unsafe.

268. Manufacturer's rating for motor vehicle tyres

(1) This regulation applies to a motor vehicle instead of the tyre speed category requirements in the relevant ADR.

(2) This regulation applies to a motor vehicle that —

(a) has 4 or more wheels; and

(b) was built after 1972; and

(c) is a light vehicle.

(3) However, this regulation does not apply to a tyre if the tyre —

(a) is recommended by the vehicle builder as suitable for limited use on the vehicle in special circumstances at a speed less than the speed applying to the vehicle under subregulation (4); or

(b) is being used in an emergency as a temporary replacement for a tyre complying with this regulation.

(4) A tyre fitted to a motor vehicle must, when first manufactured, have been rated by the tyre manufacturer as suitable for road use at the lesser of these speeds —

(a) a speed of at least —

(i) for a car with special features for off-road use — 140 km/h; or

(ii) for another car — 180 km/h; or

(iii) for another motor vehicle — 120 km/h;

(b) the vehicle's top speed.

269. Retreads for certain vehicles

(1) A tyre that is retreaded before 1 November 2002 must not be used on a motor vehicle, trailer or any vehicle in a combination if —

(a) AS 1973-1976 *Retreaded Pneumatic Passenger Car and Light Truck Tyre* or AS 1973-1985 *Retreaded Pneumatic Passenger and Light Truck Tyre* applies to the tyre; and

(b) the tyre was retreaded after publication of the Australian Standard; and

(c) the tyre was not retreaded in accordance with AS 1973-1976 *Retreaded Pneumatic Passenger Car and Light Truck Tyre*, AS 1973-1985 *Retreaded Pneumatic Passenger and Light Truck Tyre* or AS 1973-1993 *Pneumatic Tyres — Passenger Car, Light Truck and Truck/Bus — Retreading and Repair Processes*.

(2) A tyre that is retreaded after 1 November 2002 must not be used on a vehicle if —

(a) AS 1973-1993 *Pneumatic Tyres — Passenger Car, Light Truck and Truck/Bus — Retreading and Repair Processes* applies to the tyre; and

(b) the tyre was not retreaded in accordance with the Australian Standard.

270. Tyre treads for certain vehicles

(1A) In this regulation —

principal grooves, in relation to a tyre, means wide grooves, other than secondary grooves —

(a) usually positioned in the central zone of the tyre tread but that may run across the tyre tread; and

(b) in which tread wear indicators are usually located;

secondary grooves, in relation to a tyre, means shallow grooves in the tyre tread that may disappear during the life of the tyre through wear;

tread wear indicators, in relation to a tyre, means projections within a groove of the tyre that indicate the degree of wear on the tyre's tread.

(1) A tyre on a motor vehicle must not have cleats or other gripping devices that could damage road surfaces.

(2) Except at tread wear indicators, a tyre fitted to a motor vehicle, trailer or any vehicle in a combination must have a tread pattern at least 1.5 mm deep in all principal grooves on the tyre in a band that runs continuously —

(a) across —

(i) for a heavy vehicle — at least 75% of the tyre width that normally comes into contact with the road; or

(ii) for a light vehicle — the tyre width that normally comes into contact with the road;

and

(b) around the whole circumference of the tyre.

(3) A motor vehicle, trailer or any vehicle in a combination must not be fitted with a tyre that has been treated by recutting or regrooving the tread rubber, unless the tyre was —

(a) constructed with an extra thickness of rubber designed for recutting or regrooving; and

(b) labelled to indicate the construction.

[Regulation 270 amended: SL 2024/107 r. 4.]

271. Motor cycle steering gear and handlebars

(1) The handlebars on a motor cycle must extend at least 250 mm, but not over 450 mm, on each side of the centre line of the vehicle.

(2) In taking a measurement for subregulation (1), mirrors and lights mounted on the handlebars of the motor cycle are disregarded.

(3) The lowest part of the hand grip on the handlebars must not be higher than 380 mm above the attachment point of the handlebars to the motor cycle.

(4) Hand grips on the handlebars must be fitted symmetrically.

(5) If a motor cycle has the head stem as the steering pivot point, the horizontal distance from the midpoint between the head stem bearings to the centre of the front wheel must not be over 550 mm.

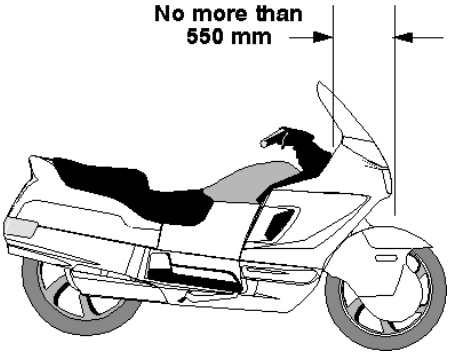

Maximum horizontal distance from midpoint between head stem bearings of motor cycle to centre of front wheel

272. Motor cycle foot rests

A motor cycle must be fitted with foot rests for the driver and for any passenger for whom a seating position is provided.

273. Motor cycle chain guards

(1) If the engine power of a motor cycle is transmitted to the rear wheel by a chain, the driver and any passenger must be protected from the front sprocket and at least the upper part of the chain by —

(a) the frame or equipment of the motor cycle; or

(b) a chain guard.

(2) A chain guard must cover the chain to a point —

(a) at least 300 mm to the rear of the rearmost foot rest; or

(b) above the centre of the rear drive sprocket.

Division 6 — Vehicle marking

274. Identification numbers for vehicle and engine

(1) In this regulation —

number includes letter.

(2) A motor vehicle must have an individual engine identification number clearly stamped, embossed or otherwise permanently marked on it.

(3) A motor vehicle built after 1930 must have the engine identification number on its engine block or the main component of its engine.

(4) A vehicle must have an individual vehicle identification number clearly stamped, embossed or otherwise permanently marked on a substantial part of its frame or chassis.

(5) A VIN or engine identification number must be located where a person can read it easily without having to use tools to remove a part of the vehicle that would otherwise obstruct the person's view.

275. White or silver band on certain vehicles

(1) This regulation applies to a motor vehicle, trailer or any vehicle in a combination that —

(a) is at least 2.2 m wide; and

(b) has a body with a vertical measurement under 300 mm at the rear, measured from the lowest point of the body above ground level to the highest point; and

(c) is not fitted with rear marking plates in accordance with regulation 328.

(2) For subregulation (1)(a), the width of a vehicle is measured disregarding any anti-skid device mounted on wheels, central

tyre inflation systems, lights, mirrors, reflectors, signalling devices and tyre pressure gauges.

(3) The vehicle must have a white or silver band at least 75 mm high across the full width of the rearmost part of the body of the vehicle.

276. Warning signs for certain combinations

(1) These vehicles must display road train warning signs complying with this regulation and regulation 277 —

(a) a combination over 36.5 m long;

(b) a road train over 30 m, but not over 36.5 m, long that includes one or more dog trailers.

(2) These vehicles must display road train warning signs, or a long vehicle warning sign, complying with this regulation and regulation 277 —

(a) a road train over 22 m, but not over 30 m, long that includes one or more dog trailers;

(b) a road train over 22 m, but not over 36.5 m, long that does not include a dog trailer.

(3) Another combination over 22 m, but not over 36.5 m, long must display a long vehicle warning sign complying with this regulation and regulation 277.

(4) Subregulations (1), (2) and (3) do not apply to the extent of any inconsistency with a notice or permit issued under another law of this State that applies to the combination.

(5) Road train warning signs must be used in pairs and fitted horizontally, one at the front and the other at the rear of the combination.

(6) A long vehicle warning sign must be fitted horizontally at the rear of the combination.

277. Specifications for warning signs for certain combinations

(1) A road train or long vehicle warning sign must be manufactured in one or 2 parts from sheet steel 0.8 mm thick or another material of at least the same stiffness, unless it is designed to be fixed to a vehicle using an adhesive.

(2) The warning sign must be at least 1.02 m wide and at least 250 mm high.

(3) A road train warning sign must display the words “road train”, and a long vehicle warning sign must display the words “long vehicle”, in black capital letters at least 180 mm high in typeface Series B (N) that complies with AS 1744-1975 *Forms of Letters and Numerals for Road Signs*.

(4) If the warning sign is in 2 parts, one word of the expression “road train” or “long vehicle” must be on one part and the other word of the expression must be on the other part.

(5) The warning sign must display the sign manufacturer’s name or logo, and the brand and class of retro-reflective material used, in block letters not over 10 mm high.

(6) The warning sign must have a black border.

(7) The warning sign must be coated with yellow retro-reflective material of class 1 or 2 that meets AS 1906-1990 *Retro-reflective Materials and Devices for Road Traffic Control Purposes*.

(8) The warning sign must be fitted so —

(a) no part of the sign is —

(i) over 1.8 m above ground level; or

(ii) under 500 mm above ground level;

and

(b) if the sign is in 2 parts — the parts are fitted at the same height above ground level.

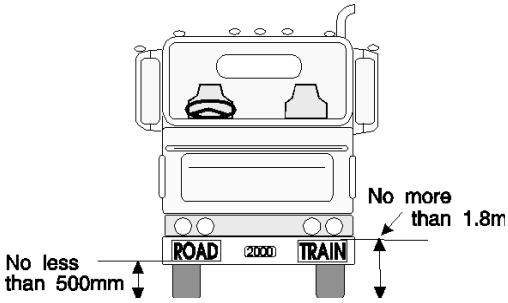

Positioning of a warning sign

278. Warning signs not to be displayed on other vehicles

(1) The whole or a part of a road train warning sign must not be displayed on a vehicle unless the vehicle is in a combination or road train mentioned in regulation 276(1) or (2).

(2) The whole or a part of a long vehicle warning sign must not be displayed on a vehicle unless the vehicle is in a combination or road train mentioned in regulation 276(2) or (3).

279. Left-hand drive signs

(1) This regulation applies to a motor vehicle that is a heavy vehicle that has the centre of a steering control to the left of the centre of the vehicle.

(2) The vehicle must display the words “left hand drive” on the rear of the vehicle.

(3) The words must be in letters at least 75 mm high, and in a colour contrast with the background to the words.

Division 7 — Vehicle configuration

280. Axle configuration for various vehicles

(1) A motor vehicle, except an articulated bus, must have only —

(a) one axle group or single axle towards the front of the vehicle; and

(b) one axle group or single axle towards the rear of the vehicle.

(2) An articulated bus must have —

(a) on its front section —

(i) only one axle group or single axle towards the front of the section; and

(ii) only one axle group or single axle towards the rear of the section;

and

(b) on another section — only one axle group or single axle.

(3) A trailer must have only —

(a) one axle group or single axle; or

(b) 2 axle groups, 2 single axles or one axle group and single axle, in this configuration —

(i) one axle group or single axle towards the front of the vehicle, with all the wheels on the axle group or single axle connected to the steering mechanism for that part of the trailer; and

(ii) one axle group or single axle towards the rear of the vehicle.

(4) A semi-trailer that is extendible or is fitted with sliding axles must —

(a) have a securing device that —

(i) can securely fix the extendible part or sliding axles to the rest of the vehicle in any position of adjustment provided; and

(ii) is located in a position that can prevent accidental or inadvertent release, if the device is mounted on the chassis of the vehicle; and

(iii) is fitted with a visible or audible warning system to indicate to a person standing beside the vehicle that the device is not engaged; and

(iv) is fitted with a way of preventing loss of air from the air brake supply, if the device uses air from the brake system and fails in a way allowing air to escape; and

(v) is held in the applied position by direct mechanical action without the intervention of an electric, hydraulic or pneumatic device;

and

(b) be built so the adjustable parts of the vehicle remain connected if the securing device fails.

281. Relation between axles in axle group for heavy vehicles

The axles in an axle group, except a twinsteer axle group, fitted to a heavy vehicle must relate to each other through a load-sharing suspension system.

Division 8 — Lights and reflectors

Subdivision 1 — General requirements for lights and vehicles not required to have lights or reflectors

282. Certain requirements apply only at night

The requirements of this Division for a light, except a brake or direction indicator light, to be visible over a stated distance apply only at night.

283. Prevention of glare

A light, except a high-beam headlight, fitted to a motor vehicle, trailer or any vehicle in a combination must be built and adjusted to provide the necessary amount of light, without dazzling the driver of another vehicle approaching, or being approached by, the vehicle.

284. Pairs of lights

(1) If lights are required under this Part to be fitted to a vehicle in pairs —

(a) a light must be fitted on each side of the longitudinal axis of the vehicle; and

(b) the centre of each light in a pair must be the same distance from the longitudinal axis of the vehicle; and

(c) the centre of each light in a pair must be at the same height above ground level; and

(d) each light in a pair must project approximately the same amount of light of the same colour.

(2) Subregulation (1) applies to a motor cycle with an attached sidecar as if the sidecar were not attached.

285. Certain vehicles not required to have lights or reflectors

This Division does not apply to a vehicle —

(a) built before 1931 that is used only in the daytime; or

(b) built before 1946 that is used mainly for exhibition purposes.

Subdivision 2 — Headlights

286. Motor vehicle headlights to be fitted

(1) A motor vehicle must be fitted with —

(a) one low-beam headlight if it is a moped, motor cycle or motor tricycle with one front wheel; or

(b) a pair of low-beam headlights if it has 4 or more wheels or is a motor tricycle, except a moped, with 2 front wheels.

(2) If a motor vehicle built after 1934 can travel at over 60 km/h —

(a) each low-beam headlight mentioned in subregulation (1) must be able to work in the high-beam position; or

(b) the vehicle must be fitted with —

(i) one headlight that can work in the high-beam position if the vehicle is required to have one low-beam headlight; or

(ii) a pair of headlights that can work in the high-beam position.

(3) A motor cycle may be equipped with a headlight modulation system that —

(a) varies the brightness of its high-beam headlight or low-beam headlight, but not both, at a rate of at least 200 and at most 280 flashes a minute; and

(b) is designed to operate only in the daytime.

(4) Up to 4 additional headlights may be fitted to a motor vehicle with 4 or more wheels, a motor cycle or a motor tricycle.

(5) An additional headlight fitted to a vehicle must be fitted so that it faces forward and is symmetrical in relation to the centre line of the vehicle.

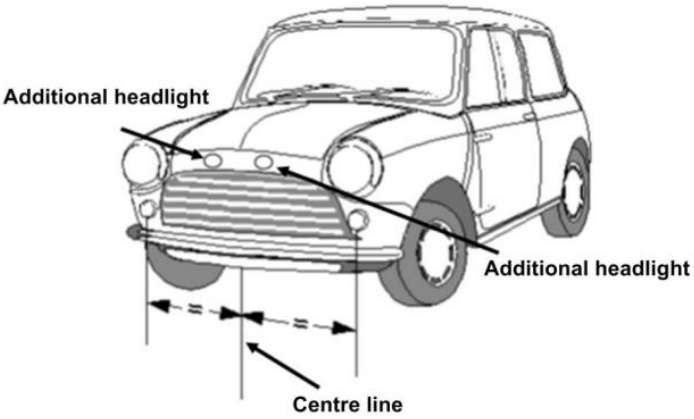

Location of additional headlights on a vehicle

[Regulation 286 amended: Gazette 29 Mar 2019 p. 967-8.]

287. Motor vehicle headlights — how fitted

(1) The centres of low-beam headlights fitted as a pair on a motor vehicle with 4 or more wheels must be at least 600 mm apart.

(2) Subregulation (1) does not apply to a motor vehicle built before 1970 if the centres of its low-beam headlights —

(a) were under 600 mm apart when the vehicle was built; and

(b) are not nearer than they were when the vehicle was built.

(3) Each low-beam headlight of a pair on a motor tricycle (except a moped) with 2 front wheels must not be over 400 mm from the nearer side of the vehicle.

(4) The centre of a low-beam headlight fitted to a motor vehicle built after June 1953 must be —

(a) at least 500 mm above ground level; and

(b) not over 1.4 m above ground level.

288. Motor vehicle single headlights — how fitted

(1) A motor cycle or motor tricycle with a single headlight fitted must have the light fitted in the centre.

(2) Subregulation (1) applies to a motor cycle with an attached sidecar as if the sidecar were not attached.

289. Motor vehicle additional headlights — how fitted

If 2 or more additional headlights are fitted to a motor vehicle with 4 or more wheels, the additional headlights must as far as possible be fitted in pairs.

290. Performance of headlights

(1) When on, a headlight or additional headlight fitted to a vehicle must —

(a) show only white light; and

(b) project its main beam of light ahead of the vehicle.

(2) Headlights must be fitted to a vehicle so their light does not reflect off the vehicle into the driver's eyes.

291. Effective range of headlights

(1) This regulation applies to a headlight that is on at night.

(2) A low-beam headlight must illuminate the road ahead of the vehicle for at least 25 m.

(3) A high-beam headlight must illuminate the road ahead of the vehicle for at least 50 m.

(4) However, a low-beam headlight fitted to a motor vehicle built before 1931, or a moped, need only illuminate the road ahead of the vehicle for 12 m.

292. Changing headlights from high-beam to low-beam position for motor vehicles

(1) A motor vehicle built after 1934 that can travel at over 60 km/h must be fitted with —

(a) a dipping device enabling the driver in the normal driving position —

(i) to change the headlights from the high-beam position to the low-beam position; or

(ii) simultaneously to switch off a high-beam headlight and switch on a low-beam headlight;

and

(b) for a vehicle built after June 1953 — a device to indicate to the driver that the headlights are in the high-beam position.

(2) A headlight fitted to a motor vehicle not fitted with a dipping device mentioned in subregulation (1)(a) must operate in the low-beam position.

(3) When a headlight fitted to a motor vehicle is switched to the low-beam position, any other headlight on the vehicle must operate only in the low-beam position or be off.

Subdivision 3 — Parking lights

293. Motor vehicle parking lights

(1) A motor vehicle built after June 1953 must be fitted with —

(a) a pair of parking lights if it is a motor tricycle with 2 front wheels (except a moped) or a motor vehicle with 4 or more wheels; or

(b) at least one parking light if it is a motor cycle with an attached sidecar, or a motor tricycle with one front wheel, (except a moped).

(2) A pair of parking lights fitted to a motor vehicle with 4 or more wheels must be fitted with the centre of each light —

(a) at least 600 mm from the centre of the other light; and

(b) not over 510 mm from the nearer side of the vehicle.

(3) However, a pair of parking lights fitted to a motor vehicle under 1 300 mm wide may be fitted with the centre of each light not under 400 mm from the centre of the other light.

(4) A parking light fitted to a motor tricycle with 2 front wheels must not be over 400 mm from the nearer side of the vehicle.

(5) A parking light fitted to a motor cycle with a sidecar must be fitted not over 150 mm from the side of the sidecar furthest from the motor cycle.

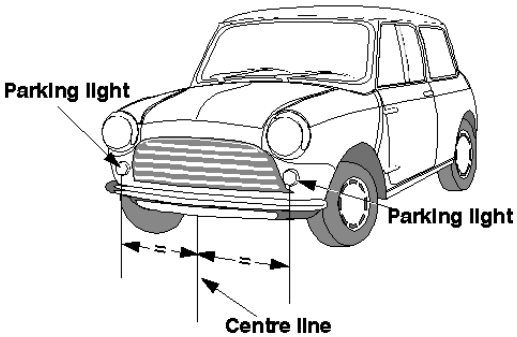

Location of parking lights on a vehicle

(6) When on, a parking light required by this regulation must —

(a) show a white or yellow light visible 200 m from the front of the vehicle; and

(b) not use over 7 W power.

(7) A parking light fitted to a motor vehicle built after 1969 must be wired so the parking light is on when a headlight on the vehicle is on.

(8) A parking light fitted to a sidecar attached to a motor cycle must be wired to operate when a headlight, tail light or parking light on the motor cycle is on.

(9) For subregulation (3), the width of a vehicle is measured disregarding any anti-skid device mounted on wheels, central tyre inflation systems, lights, mirrors, reflectors, signalling devices and tyre pressure gauges.

Subdivision 4 — Daytime running lights

294. Daytime running lights for certain vehicles

(1) A pair of daytime running lights may be fitted to a motor vehicle.

(2) A pair of daytime running lights fitted to a vehicle with 4 or more wheels must be fitted with the centre of each light —

(a) at least 600 mm from the centre of the other light; and

(b) not over 510 mm from the nearer side of the vehicle.

(3) However, a pair of daytime running lights fitted to a motor vehicle under 1 300 mm wide may be fitted with the centre of each light not under 400 mm from the centre of the other light.

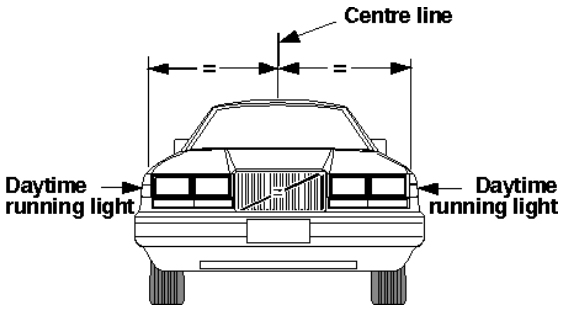

Location of daytime running lights on a vehicle

(4) When on, a daytime running light required by this regulation must —

(a) show a white or yellow light visible from the front of the vehicle; and

(b) not use over 25 W power.

(5) Daytime running lights required by this regulation must be wired so they are off when a headlight, except a headlight being used as a flashing signal, is on.

(6) For subregulation (3), the width of a vehicle is measured disregarding any anti-skid device mounted on wheels, central tyre inflation systems, lights, mirrors, reflectors, signalling devices and tyre pressure gauges.

Subdivision 5 — Tail lights

295. Tail lights for various vehicles

(1) A motor vehicle, trailer or any vehicle in a combination must have at least one tail light fitted on or towards the rear of the vehicle.

(2) A motor tricycle with 2 rear wheels, or a motor vehicle with 4 or more wheels, built after 1959 must have at least one tail light fitted on or towards each side of the rear of the vehicle.

(3) A trailer built after June 1973 must have at least one tail light fitted on or towards each side of the rear of the vehicle.

(4) The centre of a tail light mentioned in subregulation (1), (2) or (3) must not be over —

(a) 1.5 m above ground level; or

(b) if it is not practicable to fit the light lower — 2.1 m above ground level.

(5) A motor vehicle, trailer or any vehicle in a combination may have one or more additional tail lights at any height above ground level.

296. Pattern of fitting tail lights to certain vehicles

(1) If only one tail light is fitted to a motor vehicle, trailer or any vehicle in a combination, it must be fitted in the centre or to the right of the centre of the vehicle's rear.

(2) Subregulation (1) applies to a motor cycle with an attached sidecar as if the sidecar were not attached.

(3) If 2 or more tail lights are fitted to a motor vehicle, trailer or any vehicle in a combination, at least 2 tail lights must be fitted as a pair.

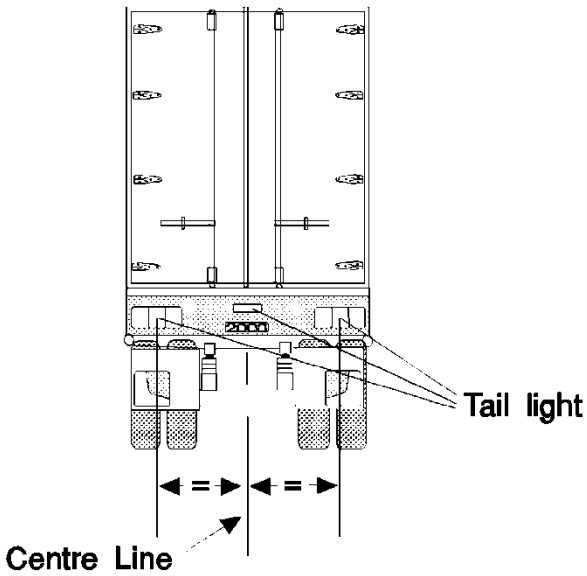

Location of tail lights on a vehicle

(4) Tail lights fitted in accordance with this Subdivision may also serve as rear clearance lights if they are fitted to a vehicle in accordance with regulation 302(3).

297. Performance of tail lights of various vehicles

(1) When on, a tail light of a motor vehicle, trailer or any vehicle in a combination must —

(a) show a red light visible 200 m from the rear of the vehicle; and

(b) not use over 7 W power.

(2) A tail light fitted to a street rod vehicle may incorporate a blue lens not over 20 mm in diameter.

298. Motor vehicle tail light wiring

A tail light of a motor vehicle must be wired to come on, and stay on, when a parking light or headlight fitted to the vehicle is on, unless an external switch is fitted to operate the tail light.

Subdivision 6 — Number plate lights

299. Number plate lights for certain vehicles

(1) At least one number plate light must be fitted to the rear of a motor vehicle, trailer or any vehicle in a combination.

(2) When on, the number plate light or lights required by this regulation must illuminate a number plate on the rear of the vehicle with white light, so the characters on the number plate can be read at night 20 m from the rear of the vehicle.

(3) A number plate light required by this regulation —

(a) may be combined with another light; and

(b) must not project white light to the rear of the vehicle except by reflection; and

(c) must not obscure the characters on the number plate; and

(d) must be wired to come on, and stay on, when a parking light, headlight or tail light fitted to the vehicle is on.

Subdivision 7 — Clearance lights

300. Front clearance lights for various vehicles

(1) Front clearance lights may be fitted only to a motor vehicle, trailer or a vehicle in a combination that is at least 1.8 m wide.

(2) A pair of front clearance lights must be fitted to a motor vehicle that is at least 2.2 m wide or is a prime mover.

(3) The centre of a front clearance light required or permitted by this regulation must be —

(a) not over 400 mm from the nearer side of the vehicle; and

(b) if the vehicle was built after June 1953 —

(i) at least 750 mm higher than the centre of any low-beam headlight fitted to the vehicle; or

(ii) not lower than the top of the windscreen.

(4) However, a front clearance light required or permitted by this regulation may be mounted on an external rear vision mirror or a mirror support if, when the mirror is correctly adjusted, no part of the lens of the clearance light is visible to a person in the normal driving position.

(5) When on, a front clearance light required or permitted by this regulation must —

(a) show a yellow or white light visible 200 m from the front of the vehicle; and

(b) not use over 7 W power.

301. External cabin lights

(1) A motor vehicle fitted with front clearance lights may also have additional forward-facing lights on or above the roof of its cabin.

(2) The additional forward-facing lights permitted by this regulation must be spaced evenly between the front clearance lights, with their centres at least 120 mm apart.

(3) When on, an additional forward-facing light permitted by this regulation must —

(a) show a yellow or white light; and

(b) not use over 7 W power.

302. Rear clearance lights for certain vehicles at least 1.8 m wide

(1) Rear clearance lights may be fitted only to a motor vehicle, trailer or any vehicle in a combination that is at least 1.8 m wide.

(2) A pair of rear clearance lights permitted by this regulation must be fitted to the rear of a vehicle that is at least 2.2 m wide.

(3) The centre of a rear clearance light permitted by this regulation must be —

(a) not over 400 mm from the nearer side of the vehicle; and

(b) if practicable, at least 600 mm above ground level.

(4) When on, a rear clearance light permitted by this regulation must —

(a) show a red light visible 200 m from the rear of the vehicle; and

(b) not use over 7 W power.

Subdivision 8 — Side marker lights

303. Side marker lights for various vehicles

(1) A pair of side marker lights must be fitted towards the rear of the sides of a motor vehicle that is over 7.5 m long and at least 2.2 m wide.

(2) A pole-type trailer, and a motor vehicle built to tow a pole-type trailer, with at least one cross-bar or bolster must have a side marker light fitted to each side of the back or only cross-bar or bolster.

(3) A pole-type trailer with 2 or more cross-bars or bolsters may also have a side marker light fitted to each side of the front cross-bar or bolster.

(4) At least 2 side marker lights must be fitted to each side of —

(a) a trailer, except a pole-type trailer, that is at least 2.2 m wide and not over 7.5 m long; and

(b) a semi-trailer that is not over 7.5 m long.

(5) At least 3 side marker lights must be fitted to each side of —

(a) a trailer, except a pole-type trailer, that is at least 2.2 m wide and over 7.5 m long; and

(b) a semi-trailer that is over 7.5 m long.

(6) For subregulations (1), (4) and (5), the width of a vehicle is measured disregarding any anti-skid device mounted on wheels, central tyre inflation systems, lights, mirrors, reflectors, signalling devices and tyre pressure gauges.

304. Location of side marker lights for various vehicles

(1) The centre of a side marker light must not be over 150 mm from the nearer side of a vehicle required or permitted under regulation 303 to have a side marker light.

(2) A front side marker light required under regulation 303 to be fitted to a motor vehicle must be towards the front of the side of the vehicle with no part of the lens visible to the driver.

(3) The centre of a front side marker light required under regulation 303 to be fitted to a trailer must be —

(a) within 300 mm of the front of the side of the trailer; or

(b) if the construction of the trailer makes it impracticable to comply with paragraph (a) — as near as practicable to the front of the trailer.

(4) The centre of a rear side marker light fitted to a vehicle required under regulation 303 to have a side marker light must be —

(a) within 300 mm of the rear of the side of the vehicle; or

(b) if the construction of the vehicle makes it impracticable to comply with paragraph (a) — as near as practicable to the rear of the vehicle.

(5) Side marker lights fitted to a vehicle required under regulation 303 to have a side marker light must, as far as practicable, be evenly spaced along the side of the vehicle.

(6) Subregulations (2) to (5) do not apply to side marker lights fitted to a cross-bar or bolster of a pole-type trailer.

(7) Only the side marker lights nearest to the rear need be fitted if complying with subregulations (3) and (4) would result in the front and rear side marker lights being under 2.5 m apart.

(8) A side marker light fitted to a vehicle required under regulation 303 to have a side marker light must be fitted so —

(a) its centre is not over —

(i) 1.5 m above ground level; or

(ii) if it is not practicable to fit it lower — 2.1 m above ground level;

and

(b) its centre is at least 600 mm above ground level; and

(c) it is, as far as practicable, in a row of side marker lights along the side of the vehicle.

(9) Subregulation (8)(a) does not apply to a side marker light that is not required to be fitted to the vehicle by regulation 303.

305. Performance of side marker lights for various vehicles

(1) When on, a side marker light fitted to a vehicle required under regulation 303 to have a side marker light must —

(a) show a light visible 200 m from the vehicle; and

(b) not use over 7 W power.

(2) When on, a side marker light fitted to a vehicle required under regulation 303 to have a side marker light must show —

(a) to the front of the vehicle — a yellow light; and

(b) to the rear of the vehicle —

(i) if the light also operates as a rear light or reflector — a red light; and

(ii) in any other case — a red or yellow light.

(3) If a pole-type trailer with 2 or more cross-bars or bolsters has the side marker lights permitted by regulation 303(3) —

(a) the side marker lights fitted to the front cross-bar must show to the front of the vehicle a yellow light; and

(b) the side marker lights fitted to the back cross-bar must show to the rear of the vehicle a light in accordance with subregulation (2)(b)(i) or (ii).

306. Side marker lights may be rear clearance light in certain cases

The side marker light required or permitted by regulation 303 that is nearest to the rear of a vehicle may also be a rear clearance light for regulation 302.

Subdivision 9 — Brake lights

307. Brake lights for various vehicles

(1) A brake light must be fitted to the rear of a motor vehicle, trailer or any vehicle in a combination built after 1934.

(2) A pair of brake lights must be fitted to the rear of —

(a) a motor vehicle built after 1959 that has 4 or more wheels; and

(b) a motor tricycle built after 1959 that has 2 rear wheels; and

(c) a trailer built after June 1973.

(3) The centre of a brake light required by this regulation must be —

(a) at least 350 mm above ground level; and

(b) not over —

(i) 1.5 m above ground level; or

(ii) if it is not practicable to fit the light lower — 2.1 m above ground level.

(4) A motor vehicle, trailer or any vehicle in a combination may be fitted with one or more additional brake lights.

(5) The centre of an additional brake light must be at least 350 mm above ground level.

(6) If only one brake light is fitted to a motor vehicle, trailer or any vehicle in a combination, it must be fitted in the centre or to the right of the centre of the vehicle's rear.

(7) Subregulation (6) applies to a motor cycle with an attached sidecar as if the sidecar were not attached.

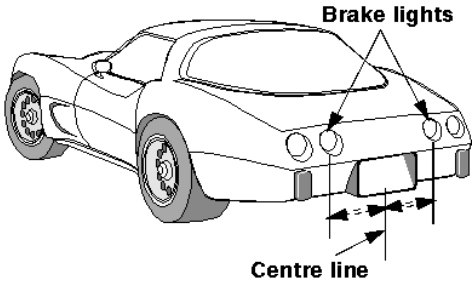

Location of brake lights on a vehicle

(8) For the purposes of this regulation, a light fitted to a vehicle that functions as a brake light and a direction indicator light is taken to be a brake light if the vehicle was built before 1 January 1973.

[Regulation 307 amended: Gazette 29 Mar 2019 p. 968.]

308. Performance and operation of brake lights of various vehicles

(1) In this regulation —

brake light means a brake light required or permitted by regulation 307.

(2) When on, a brake light must show a red light visible 30 m from the rear of the vehicle.

(3) A brake light fitted to a street rod vehicle may incorporate a blue lens not over 20 mm in diameter.

(4) A brake light fitted to a motor vehicle must come on, if it is not already on, when —

(a) for a vehicle with 4 or more wheels or built after 1974 — a service brake is applied; or

(b) for another vehicle — the rear wheel brake is applied.

(5) Subregulation (4) does not apply if the controls in the vehicle that start the engine are in a position that makes it impossible for the engine to operate.

(6) A brake light on a trailer must come on when —

(a) the brake light of the towing vehicle comes on; or

(b) a brake control on the towing vehicle, which independently activates the service brake on the trailer, is operated.

(7) A brake light may be operated by an engine brake, retarder or similar device if the device does not interfere with the proper operation of the brake light.

Subdivision 10 — Reversing lights

309. Reversing lights

(1) One or more reversing lights may be fitted to the rear of a motor vehicle, trailer or any vehicle in a combination and on each side towards the rear of the vehicle.

(2) A reversing light must have its centre not over 1.2 m above ground level.

(3) When on, a reversing light must show a white or yellow light to the rear or to the side and rear of the vehicle.

(4) A reversing light fitted to a motor vehicle must be wired so it operates only when the vehicle is reversing or in reverse gear.

(5) A reversing light fitted to a trailer must be wired so it operates only when a motor vehicle towing the trailer is reversing or in reverse gear.

(6) A yellow reversing light may also operate as a direction indicator light.

Subdivision 11 — Direction indicator lights

310. Motor vehicle direction indicator lights

(1) A motor vehicle with 4 or more wheels that was built after August 1966 must have —

(a) a pair of direction indicator lights fitted on or towards its front that face forwards; and

(b) a pair of direction indicator lights fitted on or towards its rear that face backwards.

(2) A motor vehicle with 3 wheels or fewer that was built after June 1975 must have —

(a) a pair of direction indicator lights fitted on or towards its front that face forwards; and

(b) a pair of direction indicator lights fitted on or towards its rear that face backwards.

(3) A motor vehicle that is not required to have direction indicator lights may have —

(a) one or more pairs of direction indicator lights that are visible from both the front and rear of the vehicle; or

(b) both —

(i) a pair of direction indicator lights fitted on or towards its front that face forwards; and

(ii) a pair of direction indicator lights fitted on or towards its rear that face backwards.

311. Trailer direction indicator lights

(1) A trailer built after June 1973 must have a pair of direction indicator lights fitted on or towards its rear that face backwards.

(2) A trailer that is not required to have direction indicator lights may have one or more pairs of direction indicator lights fitted on or towards its rear that face backwards.

312. Location of direction indicator lights for various vehicles

(1) In this regulation —

direction indicator light means a direction indicator light required or permitted by this Subdivision.

(2) A pair of direction indicator lights fitted to a vehicle must have the centre of each light at least —

(a) for a motor cycle or the single wheel end of a motor tricycle — 300 mm from the centre of the other light; and

(b) for lights fitted at the 2 wheel end of a motor tricycle — 600 mm from the centre of the other light, unless the centre of each direction indicator light is not over 400 mm from the nearer side of the vehicle; and

(c) for another motor vehicle or a trailer or vehicle in a combination with a width of not over 1 300 mm — 400 mm from the centre of the other light; and

(d) for another motor vehicle or a trailer or vehicle in a combination with a width of over 1 300 mm — 600 mm from the centre of the other light.

(3) The centre of each direction indicator light must be at least 350 mm above ground level.

(4) The centre of each light in a pair of direction indicator lights to be fitted to a vehicle must not be over —

(a) 1.5 m above ground level; or

(b) if it is not practicable for the light to be fitted lower — 2.1 m above ground level.

(5) For subregulation (2), the width of a vehicle is measured disregarding any anti-skid device mounted on wheels, central tyre inflation systems, lights, mirrors, reflectors, signalling devices and tyre pressure gauges.

313. Operation and visibility of direction indicator lights for various vehicles

(1) In this regulation —

direction indicator light means a direction indicator light required or permitted by this Subdivision.

(2) A direction indicator light fitted to a motor vehicle must —

(a) when operating, display regular flashes of light at a rate of not over 120 flashes a minute and —

(i) for a motor vehicle with 4 or more wheels — at least 60 flashes a minute; and

(ii) for another motor vehicle — at least 45 flashes a minute;

and

(b) be able to be operated by a person in the normal driving position; and

(c) be wired to an audible or visible device in the vehicle that tells the driver that the direction indicator light is operating; and

(d) flash at the same time and rate as any other direction indicator lights fitted on the same side of the vehicle.

(3) A direction indicator light fitted to a side of a trailer must, when operating, flash at the same time and rate as the direction indicator light or lights fitted to the same side of the motor vehicle towing the trailer.

(4) The flashes of light displayed by a direction indicator light must be —

(a) if the light faces forwards — white or yellow; and

(b) if the light faces backwards —

(i) yellow; or

(ii) for a vehicle built before July 1973 — yellow or red;

and

(c) if the light faces out from the side of the vehicle —

(i) white or yellow towards the front and side; and

(ii) for a vehicle built before July 1973 — yellow or red towards the rear and side; and

(iii) for a vehicle built after June 1973 — yellow towards the rear and side.

(5) If a motor vehicle's direction indicator lights display only yellow light, the vehicle may be equipped to allow the lights to operate simultaneously on both sides of the vehicle but only if a visible or audible signal tells the driver when the lights are operating simultaneously.

(6) When on, a direction indicator light must be visible 30 m from —

(a) if the light faces forwards — the front of the vehicle; or

(b) if the light faces backwards — the rear of the vehicle; or

(c) if the light faces out from the side of the vehicle — that side of the vehicle.

(7) When on, each direction indicator light in at least one pair of lights fitted on or towards the front of a prime mover, or a motor vehicle over 7.5 m long, must be visible at a point —

(a) 1.5 m at right angles from the side of the vehicle where the light is fitted; and

(b) in line with the rear of the vehicle.

Subdivision 12 — Fog lights

314. Front fog lights for certain motor vehicles

(1) A pair of front fog lights may be fitted to a motor vehicle with 4 or more wheels.

(2) A pair of front fog lights or a single front fog light may be fitted to a motor cycle or motor tricycle.

(3) A pair of front fog lights fitted to a motor vehicle with 4 or more wheels must have the centre of each light not over 400 mm from the nearer side of the vehicle unless the centres of the lights are at least 600 mm apart.

(4) If the top of a front fog light is higher than the top of any low-beam headlight on the vehicle, the centre of the fog light must not be higher than the centre of the low-beam headlight.

(5) A front fog light must —

(a) when on —

(i) project white or yellow light in front of the vehicle; and

(ii) be a low-beam light;

and

(b) be able to be operated independently of any headlight; and

(c) be fitted so the light from it does not reflect off the vehicle into the driver's eyes.

315. Rear fog lights for certain vehicles

(1A) In this regulation —

rear fog light means a light used on a vehicle to make the vehicle more easily visible from the rear in dense fog.

(1) A motor vehicle, trailer or any vehicle in a combination may have fitted to its rear —

(a) a pair of rear fog lights; or

(b) one rear fog light fitted on or to the right of the centre of the vehicle.

(2) Subregulation (1)(b) applies to a motor cycle with an attached sidecar as if the sidecar were not attached.

(3) A rear fog light must —

(a) have its centre —

(i) not over 1.5 m above ground level; and

(ii) at least 100 mm from the centre of a brake light;

and

(b) when on, project red light behind the vehicle; and

(c) not use over 27 W power; and

(d) be wired to a visible device in the vehicle that tells the driver that the rear fog light is operating.

[Regulation 315 amended: Gazette 29 Mar 2019 p. 968.]

Subdivision 13 — Interior lights

316. Interior lights for certain vehicles

A motor vehicle, trailer or any vehicle in a combination may be fitted with interior lights that illuminate any interior part of the vehicle.

Subdivision 14 — Reflectors generally

317. General requirements for reflectors for certain vehicles

(1) A reflector fitted to a motor vehicle, trailer or any vehicle in a combination must show a red, yellow or white reflection of light when light is projected directly onto the reflector at night by a low-beam headlight that —

(a) is 45 m from the reflector; and

(b) complies with each regulation in this Part that applies to the vehicle.

(2) The reflection must be clearly visible from the position of the headlight.

Subdivision 15 — Rear reflectors

318. Rear reflectors for certain vehicles

(1) A motor vehicle with 4 or more wheels and a trailer must have a rear-facing red reflector towards each side of its rear.

(2) A motor cycle, a sidecar attached to a motor cycle, and a motor tricycle, must have a rear-facing red reflector.

(3) The centre of each reflector required by this regulation, except a reflector fitted to a sidecar attached to a motor cycle, must be —

(a) at the same height above ground level; and

(b) not over 1.5 m above ground level.

(4) A reflector fitted to a motor vehicle with 4 or more wheels or to a trailer must not be over 400 mm from the nearer side of the vehicle.

(5) A vehicle fitted with rear-facing red reflectors in accordance with subregulation (1) or (2) may be fitted with additional red reflectors at any height above ground level or at any distance from the side of the vehicle.

Subdivision 16 — Side reflectors

319. Compulsory and optional side reflectors on pole-type trailers

(1) Yellow or red side-facing reflectors must be fitted to the pole of a pole-type trailer so —

(a) one reflector is fitted to the middle third of the left and right faces of the pole; and

(b) the front reflector is not over 3 m from the front of the trailer; and

(c) the other reflectors are not over 3 m apart.

(2) Additional side-facing reflectors may be fitted to a pole-type trailer in accordance with regulation 320.

320. Optional side reflectors

(1) A motor vehicle, trailer or any vehicle in a combination may be fitted with side-facing reflectors.

(2) A side-facing reflector —

(a) towards the front of the vehicle must be yellow or white; and

(b) towards the rear of the vehicle must be yellow or red; and

(c) on the central part of the vehicle must be yellow.

Subdivision 17 — Front reflectors

321. Compulsory and optional front reflectors on trailers

(1) A front-facing white or yellow reflector must be fitted towards each side of the front of —

(a) a semi-trailer, except a pole-type trailer; and

(b) the front cross-bar or bolster of a pole-type trailer; and

(c) a trailer that is at least 2.2 m wide.

(2) Each reflector required by subregulation (1) must have its centre —

(a) at the same height above ground level; and

(b) not over 1.5 m above ground level; and

(c) not over 400 mm from the nearer side of the vehicle.

(3) Additional front-facing reflectors may be fitted to a trailer mentioned in subregulation (1) in accordance with regulation 322.

322. Optional front reflectors for various vehicles

(1) A motor vehicle with 4 or more wheels or a trailer may have one or more front-facing white or yellow reflectors fitted towards each side of its front.

(2) A motor vehicle with 3 wheels or fewer may have one or more front-facing white or yellow reflectors.

(3) The centre of at least one reflector permitted by this regulation on each side of the front of the vehicle must be —

(a) at the same height above ground level as the centre of the other reflector; and

(b) the same distance from the longitudinal axis of the vehicle as the centre of the other reflector; and

(c) at least —

(i) for a vehicle with a width under 1 300 mm — 400 mm from the centre of the other reflector; and

(ii) for another vehicle — 600 mm from the centre of the other reflector.

(4) For subregulation (3)(c), the width of a vehicle is measured disregarding any anti-skid device mounted on wheels, central tyre inflation systems, lights, mirrors, reflectors, signalling devices and tyre pressure gauges.

Subdivision 18 — Warning lights and signs on buses carrying children

323. Term used: bus

In this Subdivision —

bus means a bus that —

(a) is used mainly for carrying children; and

(b) was fitted with warning lights after June 1999.

324. Fitting of warning lights and signs

(1) Two warning lights and a warning sign must be fitted to the front and rear of a bus.

(2) The warning lights must be fitted —

(a) on each side of, and the same distance from, the centre of the warning sign; and

(b) with the edge of the warning sign not over 100 mm from the nearest point on the lens of the warning lights; and

(c) with the distance between the warning lights at least 300 mm at the nearest point; and

(d) so no part of the bus obstructs the light displayed —

(i) 30º to the left and right of the centre of each light; and

(ii) 10º above and below the centre of each light.

(3) The warning lights may be on the warning sign if the words or image on the sign are not obscured.

(4) The warning lights at the same end of the bus must be fitted —

(a) at the same height; and

(b) as high as practicable; and

(c) with the lowest point on the lens of each light not lower than midway between the highest and lowest points on the bus body.

(5) If the centres of the warning lights are under 1.8 m above ground level, no part of the warning lights or warning sign may be on the left of the bus.

(6) This regulation applies to a bus despite any requirement of a third edition ADR.

325. Operation and performance of warning lights

(1) When operating, a bus's warning light must display regular flashes of yellow light at a rate of at least 90, and not over 180, flashes a minute.

(2) The warning lights at the same end of a bus must flash alternately.

(3) A bus's warning lights must operate automatically when a door on the bus opens and for at least 10, and not over 20, seconds after all the doors on the bus have closed, unless the driver has turned the warning lights off.

(4) A bus must have a visible or audible signal that tells the driver when the warning lights are operating.

(5) A bus must be fitted with a switch that allows the driver to turn the warning lights off.

(6) A warning light must have —

(a) an effective lit lens area of at least 60 cm^2; and

(b) a luminous intensity (in candela) of at least the values mentioned in the Table when measured at the angles mentioned in the Table.

Table

Vertical angle from centre of light	**Horizontal angle from centre of light**								
	-30°	**-20°**	**-10°**	**-5°**	**0°**	**5°**	**10°**	**20°**	**30°**
10º				50	80	50			
5º		180	320	350	450	350	320	180	
0º	75	450	1000	1250	1500	1250	1000	450	75
-5º	40	270	450	570	600	570	450	270	40
-10º				75	75	75			

(7) For subregulation (6)(b), the luminous intensity of a light must be measured in accordance with the test method mentioned in the third edition ADR 6.

326. Specifications for warning signs

(1) A warning sign at the front of a bus must —

(a) display the words ‘school bus’ in capital letters at least 100 mm high; or

(b) display an image of 2 children in the same proportions as the children in AS 1743-2001 *Road Signs — Specifications (Image W6-3)*, with the image of the taller child at least 230 mm high.

(2) A warning sign at the rear of a bus must display an image of 2 children in the same proportions as the children in AS 1743-2001 *Road Signs — Specifications (Image W6-3)*, with the image of the taller child at least 230 mm high.

(3) The warning sign mentioned in subregulations (1)(b) and (2) must —

(a) be a rectangular shape at least —

(i) if warning lights are on the warning sign — 550 mm wide and 400 mm high; and

(ii) in any other case — 400 mm wide and 250 mm high;

and

(b) have a black border; and

(c) have black graphics and be coated with yellow retro-reflective material of class 1 or 2 that meets AS 1906 *Retro-reflective Materials and Devices for Road Traffic Control Purposes*.

[Regulation 326 amended: Gazette 29 Mar 2019 p. 968.]

Subdivision 19 — Other lights, reflectors, rear marking plates or signals

327. Other lights and reflectors

(1) A vehicle may be fitted with any light or reflector not mentioned in this Part.

(2) However, unless subregulation (3) applies, a vehicle must not display —

(a) a light that flashes; or

(b) a light or reflector that —

(i) shows a red light to the front; or

(ii) shows a white light to the rear; or

(iii) is shaped or located in a way that reduces the effectiveness of a light or reflector that is required to be fitted to the vehicle under this Part.

(3) Despite any requirement of a third edition ADR —

(a) an exempt vehicle may be fitted with any light or reflector approved by the CEO; and

(b) a special use vehicle may be fitted with one or more flashing yellow lights (or flashing lights of another colour or colours approved by the CEO).

(4) In subregulation (3) —

exempt vehicle means any of these —

(a) an emergency vehicle;

(b) an Australian Protective Service vehicle;

(c) an Australian Border Force vehicle;

(d) an Airservices Australia vehicle;

(e) any other type of vehicle approved by the CEO and used in conformity with any conditions that may be imposed by the CEO;

special use vehicle means any of these —

(a) a vehicle built or fitted for use in hazardous situations on a road;

(b) a vehicle that because of its dimensions is permitted to be driven only in accordance with —

(i) an order or permit as defined in section 32 or 38; or

(ii) a permit issued under regulation 453 or 454;

(c) a vehicle built or fitted to accompany a vehicle mentioned in paragraph (b);

(d) a bus fitted, before July 1999, with a sign telling road users that the bus carries children;

(e) a transport enforcement vehicle;

(f) any other type of vehicle approved by the CEO and used in conformity with any conditions that may be imposed by the CEO.

[Regulation 327 amended: Gazette 29 Mar 2019 p. 968.]

328. Rear marking plates for certain vehicles

(1) In this regulation —

rear marking plate means a rear marking plate complying with *Vehicle Standards Bulletin* VSB 12.

(2) Rear marking plates must be fitted to —

(a) a motor vehicle with a GVM of more than 12 t, except a bus fitted with hand grips or similar equipment for standing passengers to hold; and

(b) a trailer with a GTM of more than 10 t.

(3) Subregulation (2) applies to a vehicle even if it was built before the date stated in VSB 12.

(4) Rear marking plates may be fitted to a motor vehicle with a GVM of 12 t or less or a trailer with a GTM of 10 t or less.

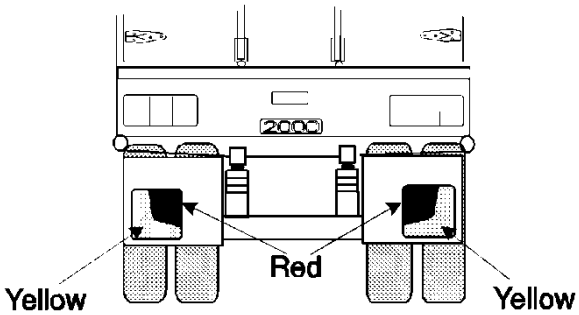

Rear marking plates

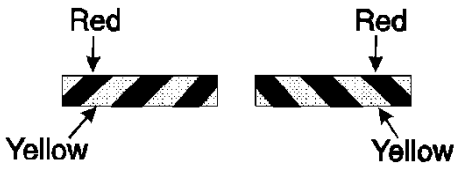

Alternative pattern for rear marking plates

[Regulation 328 amended: Gazette 29 Mar 2019 p. 969.]

329. Signalling devices for certain motor vehicles

A motor vehicle must be fitted with a mechanical signalling device or a pair of turn signals if —

(a) the vehicle is not fitted with a brake light or direction indicator light mentioned in Subdivision 9 or 11; and

(b) the construction of the vehicle would otherwise prevent the driver from hand signalling an intention —

(i) to turn or move the vehicle to the right; or

(ii) to stop or suddenly reduce the speed of the vehicle.

330. Mechanical signalling devices

(1) A mechanical signalling device required by regulation 329 must —

(a) be fitted to the right side of the motor vehicle; and

(b) be able to be operated by the driver from a normal driving position; and

(c) consist of a white or yellow representation of an open human hand at least 150 mm long; and

(d) be constructed so that the driver of the motor vehicle can keep the device —

(i) in a neutral position so it is unlikely that the driver of another vehicle or anyone else would regard it as a signal; and

(ii) in a horizontal position with the palm of the hand facing forwards and the fingers pointing out at a right angle to the vehicle to signal an intention to turn or move right; and

(iii) with the palm of the hand facing forwards and the fingers pointing upwards to signal an intention to stop or reduce speed suddenly.

(2) When the mechanical signalling device is in a position mentioned in subregulation (1)(d)(ii) or (iii), the complete hand must be clearly visible from both the front and the rear of the vehicle, at a distance of 30 m.

331. Turn signals

A turn signal required by regulation 329 must —

(a) consist of a steady or flashing illuminated yellow sign at least 150 mm long and 25 mm wide that —

(i) when in operation — is kept horizontal; and

(ii) when not in operation — is kept in a position so it is unlikely that the driver of another vehicle or anyone else would regard it as a signal;

and

(b) be fitted to the side of the motor vehicle at least 500 mm and not over 2.1 m above ground level, in a position so the driver of the vehicle, from the normal driving position, can see whether the signal is in operation; and

(c) be able to be operated by the driver from the normal driving position; and

(d) when in operation, be visible from both the front and rear of the vehicle at a distance of 30 m.

Division 9 — Braking systems

Subdivision 1 — Brake requirements for motor vehicles, trailers, combinations

332. Braking system materials, components for certain vehicles

(1) A brake tube or hose fitted to a motor vehicle, trailer or any vehicle in a combination must —

(a) be manufactured from a material appropriate to its intended use in the vehicle; and

(b) be long enough to allow for the full range of steering and suspension movements of the vehicle; and

(c) be fitted to prevent it being damaged during the operation of the vehicle by —

(i) a source of heat; or

(ii) any movement of the parts to which it is attached or near.

(2) Each component of the braking system of a heavy vehicle must comply with the design and performance requirements of —

(a) a relevant standard made on or before 29 January 1999 approved by any of these bodies and as in force on 29 January 1999 —

(i) Standards Australia;

(ii) British Standards Institution;

(iii) American Society of Automotive Engineers;

(iv) American National Standards Institute;

(v) Japanese Standards Association;

(vi) Deutsches Institut für Normung;

(vii) International Organisation for Standardisation;

(viii) European Committee for Standardization (CEN);

or

(b) a relevant standard made after 29 January 1999 approved by any of the bodies mentioned in paragraph (a) and as in force on the day on which the standard was approved.

333. Provision for wear

The braking system of a motor vehicle, trailer or any vehicle in a combination must allow for adjustment to take account of normal wear.

334. Supply of air or vacuum to brakes of certain vehicles

(1A) In this regulation —

compressed air reserve, for a vehicle, means compressed air stored on the vehicle for supplying the vehicle's braking system;

condensate drain valve means a device used to remove water from the compressed air reserve for a vehicle fitted with air brakes;

governor cut-out pressure, of a vehicle, means the air pressure at which the vehicle's air brake compressor stops supplying air to the vehicle's air brake reservoir;

spring brake means a brake using one or more springs to store the energy needed to operate the brake;

vacuum reserve, in relation to a vehicle, means air at a low pressure stored on the vehicle for supplying the vehicle's braking system.

(1) If air brakes are fitted to a motor vehicle, trailer or any vehicle in a combination —

(a) the compressor supplying air to the brakes must be able to build up air pressure to at least 80% of the governor cut-out pressure in not over 5 minutes after the compressed air reserve is fully used up; and

(b) for a heavy vehicle — the air storage tanks must have sufficient capacity to allow 5 applications of the service

brakes before the air pressure drops below half the governor cut-out pressure; and

(c) there must be an automatic or manual condensate drain valve at the lowest point of each air brake reservoir in the vehicle's braking system; and

(d) any spring brake fitted to the vehicle must not operate before the warning mentioned in regulation 338(4)(a) or 341(4)(a) has been given.

[(2) deleted]

(3) If vacuum brakes are fitted to a motor vehicle, trailer or any vehicle in a combination, the vacuum supply must be able to build up a vacuum —

(a) to the level when the warning signal mentioned in regulation 338(4)(a) or 341(4)(a) no longer operates within 30 seconds after the vacuum reserve is fully used up; and

(b) to the normal working level within 60 seconds after the vacuum reserve is fully used up.

[Regulation 334 amended: Gazette 29 Mar 2019 p. 969.]

335. Performance of braking systems of certain vehicles

(1) One sustained application of the brake of a motor vehicle built after 1930, or a combination that includes a motor vehicle built after 1930, must be able to produce the performance mentioned in subregulations (2) to (7) —

(a) when the vehicle or combination is on a dry, smooth, level road surface, free from loose material; and

(b) whether or not the vehicle or combination is loaded; and

(c) without part of the vehicle or combination moving outside a straight path —

(i) centred on the longitudinal axis of the vehicle or combination before the brake was applied; and

(ii) 3.7 m wide.

(2) The braking system of a motor vehicle with a gross mass of less than 2.5 t must bring the vehicle from a speed of 35 km/h to a stop within —

(a) 12.5 m when the service brake is applied; and

(b) 30 m when the emergency brake is applied.

(3) The braking system of a motor vehicle with a gross mass of 2.5 t or more must bring the vehicle from a speed of 35 km/h to a stop within —

(a) 16.5 m when the service brake is applied; and

(b) 40.5 m when the emergency brake is applied.

(4) The braking system of a motor vehicle with a gross mass of less than 2.5 t must decelerate the vehicle from any speed at which the vehicle can travel, by an average of at least —

(a) 3.8 m a second a second when the service brake is applied; and

(b) 1.6 m a second a second when the emergency brake is applied.

(5) The braking system of a motor vehicle with a gross mass of 2.5 t or more must decelerate the vehicle from any speed at which the vehicle can travel, by an average of at least —

(a) 2.8 m a second a second when the service brake is applied; and

(b) 1.1 m a second a second when the emergency brake is applied.

(6) The braking system of a motor vehicle with a gross mass of less than 2.5 t must achieve a peak deceleration of the vehicle from any speed at which the vehicle can travel, of at least —

(a) 5.8 m a second a second when the service brake is applied; and

(b) 1.9 m a second a second when the emergency brake is applied.

(7) The braking system of a motor vehicle with a gross mass of 2.5 t or more must achieve a peak deceleration of the vehicle from any speed at which the vehicle can travel, of at least —

(a) 4.4 m a second a second when the service brake is applied; and

(b) 1.5 m a second a second when the emergency brake is applied.

(8) The parking brake of a vehicle or combination must be able to hold the vehicle or combination stationary on a 12% gradient —

(a) when the vehicle or combination is on a dry, smooth road surface, free from loose material; and

(b) whether or not the vehicle or combination is loaded.

[Regulation 335 amended: Gazette 29 Mar 2019 p. 969-70.]

Subdivision 2 — Motor vehicle braking systems

336. Motor vehicle braking system requirements

(1) In this regulation —

independent brake, for a motor vehicle, means a brake that is operated entirely separately from any other brake on the vehicle, except for any drum, disc or part, on which a shoe, band or friction pad makes contact, that is common to 2 or more brakes.

(2) A motor vehicle with 4 or more wheels built or used mainly for transporting goods or people by road must be fitted with —

(a) a braking system that —

(i) consists of brakes fitted to all wheels of the vehicle; and

(ii) has at least 2 separate methods of activation, arranged so effective braking remains on at least 2 wheels if a method fails;

or

(b) 2 independent brakes, each of which, when in operation, acts directly on at least half the number of wheels of the vehicle.

(3) The braking system of a motor vehicle mentioned in subregulation (2) that was built after 1945 must have a service brake operating on all wheels that, when applied —

(a) acts directly on the wheels and not through the vehicle's transmission; or

(b) acts on a shaft between a differential of the vehicle and a wheel.

(4) The braking system of a motor vehicle with 4 or more wheels must have a parking brake that —

(a) is held in the applied position by direct mechanical action without the intervention of an electrical, hydraulic or pneumatic device; and

(b) is fitted with a locking device that can hold the brake in the applied position; and

(c) has its own separate control.

(5) A motor vehicle's parking brake may also be its emergency brake.

(6) If 2 or more independent brakes are fitted to a motor vehicle with 4 or more wheels, the brakes must be arranged so brakes are applied to all the wheels on at least one axle of the vehicle when any brake is operated.

(7) A motor cycle or motor tricycle must be fitted with —

(a) 2 independent brakes; or

(b) a single brake that acts directly on all wheels of the vehicle and is arranged so effective braking remains on at least one wheel if a part of the system fails.

(8) Subregulation (7) applies to a motor cycle with a sidecar attached as if the sidecar were not attached.

(9) A motor tricycle must have a parking brake that is held in the applied position by mechanical means.

337. Operation of brakes on motor vehicles

The braking system on a motor vehicle must be arranged to allow the driver of the motor vehicle to apply the brakes from a normal driving position.

338. Air or vacuum brakes on motor vehicles

(1) If a motor vehicle has air brakes, the braking system of the vehicle must include at least one air storage tank.

(2) If a motor vehicle has vacuum brakes, the braking system of the vehicle must include at least one vacuum storage tank.

(3) An air or vacuum storage tank must be built so the service brake can be applied to meet the performance standards of regulation 335 at least twice if the engine of the vehicle stops or the source of air or vacuum fails.

(4) An air or vacuum storage system must —

(a) be built to give a visible or audible warning to the driver, while in a normal driving position, of a lack of air or vacuum that would prevent the service brake from being applied to meet the performance standards of regulation 335 at least twice; and

(b) be safeguarded by a check valve or other device against loss of air or vacuum if the supply fails or leaks.

(5) However, subregulation (4)(a) does not apply to a light vehicle that is fitted with an air or vacuum assisted braking system.

(6) If air brakes or vacuum brakes are fitted to a motor vehicle equipped to tow a trailer, the brakes of the vehicle must be able to stop the vehicle, at the performance standards for emergency brakes under regulation 335 if the trailer breaks away.

(7) The braking system of a heavy vehicle equipped to tow a trailer fitted with air brakes must include protection against loss of supply line air or brake control signal air.

(8) The protection mentioned in subregulation (7) must —

(a) operate automatically if a brake supply line hose connecting the motor vehicle and a trailer fails; and

(b) maintain enough air pressure to allow the brakes to be applied to meet performance standards for emergency brakes under regulation 335; and

(c) include a visible or audible warning to the driver.

Subdivision 3 — Trailer braking systems

339. Trailer braking system requirements

(1) A trailer with a GTM of more than 750 kg must have brakes that operate on at least one wheel at each end of one or more axles of the trailer.

(2) A semi-trailer or converter dolly with a GTM of more than 2 t must have brakes that operate on all its wheels.

340. Operation of brakes on trailers

(1) The braking system of a trailer with a GTM of more than 2 t must allow the driver of a motor vehicle towing the trailer to operate the brakes from a normal driving position.

(2) However, subregulation (1) does not apply to an unloaded converter dolly that weighs less than 3 t if the motor vehicle towing the converter dolly has a GVM of more than 12 t.

(3) The brakes on a trailer with a GTM of more than 2 t must —

(a) operate automatically and quickly if the trailer breaks away from the towing vehicle; and

(b) remain in operation for at least 15 minutes after a break-away; and

(c) be able to hold the trailer on a 12% gradient while in operation after a break-away.

341. Air brakes or vacuum brakes on trailers

(1) This regulation does not apply to a trailer with a GTM of 2 t or less.

(2) If a trailer has air brakes, its braking system must include at least one air storage tank.

(3) If a trailer has vacuum brakes, its braking system must include at least one vacuum storage tank.

(4) An air or vacuum storage system required by this regulation must —

(a) be built to give a visible or audible warning to the driver of the towing vehicle, while in a normal driving position, of a lack of air or vacuum that would prevent the brakes from meeting the performance standards of regulation 335; and

(b) be safeguarded by a check valve or other device against loss of air or vacuum if the supply fails or leaks.

Subdivision 4 — Additional brake requirements for B-doubles and long road trains

342. Subdivision does not apply to certain road trains

This Subdivision does not apply to a road train or to a vehicle used in a road train, if the road train has a length of 19 m or less.

343. Braking system design for a prime mover in a B-double

(1) A prime mover used in a B-double must comply with second edition ADR 35A or third edition ADR 35.

(2) A prime mover used in a B-double must also have an anti-lock braking system complying with third edition ADR 64, if the prime mover —

(a) was built after 1989; and

(b) is used in a B-double that includes a road tank vehicle carrying dangerous goods.

344. Braking system design for motor vehicles in road trains

The performance of the service, secondary and parking brake systems of a motor vehicle used in a road train must comply with second edition ADR 35A or third edition ADR 35 if the vehicle would not otherwise be required to comply with an ADR about braking.

345. Braking system design for trailers in B-doubles or road trains

(1) The performance of the service, secondary and parking brake systems of a trailer used in a B-double or road train must comply with second edition ADR 38 or third edition ADR 38 if the trailer would not otherwise be required to comply with an ADR about braking.

(2) A road train trailer to which subregulation (1) applies need not be fitted with a mechanical parking brake if it carries wheel chocks that provide a performance equal to the performance standard required for a parking brake system.

(3) A semi-trailer, regardless of when it was built, must have an anti-lock braking system that complies with third edition ADR 38/01, if —

(a) it is being used in a B-double that includes a road tank vehicle, whether or not the semi-trailer is itself a road tank vehicle; and

(b) the road tank vehicle is carrying dangerous goods.

346. Air brakes of motor vehicles in B-doubles or road trains

(1) If a B-double or road train is fitted with brakes that operate using compressed air, the braking system of the motor vehicle must comply with subregulations (2) and (3) when —

(a) the pressure is measured in an 800 mL vessel connected by a 2 m pipe with a bore of approximately 13 mm to the coupling head of the braking system; and

(b) the air pressure before the brakes are applied is not under —

(i) the average of the maximum and minimum pressures in the operating pressure range specified by the vehicle's manufacturer; or

(ii) if there is no manufacturer's specification — 650 kPa.

(2) The pressure must reach at least 420 kPa within 400 milliseconds after the rapid and complete application of the foot-operated brake control.

(3) After the brakes have been fully applied, the pressure must fall within half a second after the release of the foot-operated brake control to 35 kPa.

347. Air brakes in a B-double or road train — least favoured chamber

(1) In this regulation —

least favoured chamber means the brake chamber with the longest line to the treadle valve in the prime mover.

(2) The pressure in the least favoured chamber of the braking system of a B-double or road train with brakes that operate using compressed air must comply with subregulations (3) and (4) when the air pressure before the brakes are applied is not under —

(a) the average of the maximum and minimum pressures in the operating pressure range specified by the vehicle's manufacturer; or

(b) if there is no manufacturer's specification — 650 kPa.

(3) The pressure must reach at least 420 kPa within —

(a) for a B-double — one second after the rapid and complete application of the foot-operated brake control; or

(b) for a road train — 1.5 seconds after the rapid and complete application of the foot-operated brake control.

(4) After the brakes have been fully applied, the pressure must fall to 35 kPa, or the pressure at which the friction surfaces cease to contact each other, within —

(a) for a B-double — one second after the release of the foot-operated brake control; or

(b) for a road train — 1.5 seconds after the release of the foot-operated brake control.

348. Recovery of air pressure for brakes in B-doubles and road trains

The air pressure in each air brake reservoir in a B-double or road train must recover to at least 420 kPa within one minute

after 3 full brake applications have been made within a 10 second period if, before the 3 brake applications have been made —

(a) the engine is running at maximum speed; and

(b) the governor cut-in pressure is no higher than —

(i) the pressure specified by the vehicle's manufacturer; or

(ii) if there is no manufacturer's specification — 550 kPa;

and

(c) the air pressure in the storage tanks of the vehicle is not under —

(i) the average of the maximum and minimum pressures in the operating pressure range specified by the vehicle's manufacturer; or

(ii) if there is no manufacturer's specification — 650 kPa.

349. Air supply for brakes in B-doubles and road trains

A B-double or road train that uses compressed air to operate accessories must have —

(a) sufficient air compressor capacity and air receiver volume to ensure that the operation of the accessories does not adversely affect brake performance; and

(b) a compressed air system built to ensure that the brake system is preferentially charged.

350. Brake line couplings

(1) Brake line couplings on the same part of a vehicle in a B-double or road train must not be interchangeable.

(2) The couplings must be polarised in accordance with AS D8-1971 *Hose Couplings for Use with Vacuum and*

Air-Pressure Braking Systems on Prime Movers, Trailers and Semi-trailers if the hoses used with the brake couplings are used for the same purpose as the hoses mentioned in the standard.

351. Simultaneous parking brake application

(1) If the parking brake of a motor vehicle in a B-double or road train is applied, the parking brakes of any attached trailer must be applied automatically.

(2) This regulation does not apply to a trailer carrying wheel chocks complying with regulation 345(2).

352. Capacity of air reservoirs

(1) The capacity of the air storage tanks of a motor vehicle used in a B-double or road train must be at least 12 times the volume of all the brake activation chambers on the motor vehicle.

(2) The capacity of the air storage tanks of a trailer used in a B-double or road train must be at least 8 times the volume of all the brake activation chambers on the trailer.

Division 10 — Vehicle emissions

Subdivision 1 — Crank case gases and visible emissions

353. Crank case gases of various motor vehicles

(1) This regulation applies to a motor vehicle with 4 or more wheels that is powered by a petrol engine and was built after 1971.

(2) A motor vehicle mentioned in subregulation (1) must be built to prevent, or fitted with equipment that prevents, crank case gases from escaping to the atmosphere.

354. Visible emissions of certain motor vehicles

(1) This regulation applies to a motor vehicle that is propelled by an internal combustion engine and was built after 1930.

(2) A motor vehicle mentioned in subregulation (1) must not emit visible emissions for a continuous period of at least 10 seconds.

(3) This regulation does not apply to emissions that are visible only because of heat or the condensation of water vapour.

Subdivision 2 — Exhaust systems

355. Exhaust systems for various motor vehicles

(1) The outlet of the exhaust system fitted to a motor vehicle (except a bus) must extend —

(a) behind the back seat; and

(b) at least 40 mm beyond the outermost joint of the floorpan that is not continuously welded or permanently sealed; and

(c) to the edge of the vehicle, if —

(i) the body of the vehicle is permanently enclosed; and

(ii) the vehicle is not fitted with a vertical exhaust system;

and

(d) no further than the edge of the vehicle at its widest point.

(2) The outlet required by subregulation (1) must discharge the main exhaust flow to the air —

(a) if the vehicle is fitted, or required to be fitted, with an exhaust system with a vertical outlet pipe —

(i) at an angle above the horizontal; and

(ii) at least 150 mm above the cab of the vehicle; and

(iii) rearwards or to the right of the vehicle;

and

(b) in any other case —

(i) horizontally or at an angle of not over 45° downwards; and

(ii) under 750 mm above ground level; and

(iii) rearwards or to the right of the vehicle.

(3) An exposed section of a vertical exhaust system fitted to a motor vehicle that is a heavy vehicle (except a bus) must be positioned or shielded to prevent injury.

(4) The outlet of the exhaust system fitted to a bus that is a heavy vehicle must —

(a) be as near as practicable to the rear of the vehicle; and

(b) extend no further than the edge of the bus at its widest point.

(5) The outlet required by subregulation (4) must discharge the main exhaust flow to the air —

(a) if the bus is fitted, or required to be fitted, with an exhaust system with a vertical outlet pipe —

(i) behind the passenger compartment; and

(ii) at an angle above the horizontal; and

(iii) upwards or rearwards;

and

(b) in any other case —

(i) horizontally or at an angle of not over 45° downwards; and

(ii) rearwards or to the right of the vehicle.

(6) A vertical exhaust system fitted to a motor vehicle that is a heavy vehicle must —

(a) if the vehicle is fitted with an exhaust system with a vertical outlet pipe that does not direct the main exhaust flow straight up — direct the flow rearwards at an angle

within 0° to 45° of the longitudinal centre line of the vehicle; and

(b) if a rain cap is fitted to the outlet pipe — be installed so the hinge of the cap is at an angle of 90° (plus or minus 10°) to the longitudinal centre line of the vehicle when viewed from above.

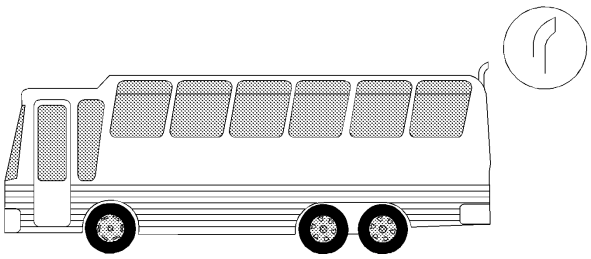

Bus exhaust outlet pipe

Subdivision 3 — Emission control systems

356. Emission control systems to be fitted and properly maintained

(1) In this regulation —

emission control system, for a vehicle, means an emission control system —

(a) fitted to the vehicle when it was built; or

(b) better than, or equivalent to, an emission control system fitted to the vehicle when it was built.

(2) This regulation —

(a) applies to a motor vehicle or trailer whether or not it forms part of a combination; and

(b) does not apply to an agricultural implement.

(3) Each emission control system of a vehicle must remain fitted to the vehicle.

(4) Each emission control system fitted to a vehicle must be in a condition that ensures that the system continues operating essentially in accordance with the system's original design.

Subdivision 4 — Noise emissions

357. Measurement of stationary noise levels

(1) In this regulation —

Commission means the National Transport Commission established by the *National Transport Commission Act 2003* (Commonwealth).

(2) For this Subdivision, the stationary noise level of a motor vehicle is to be measured in accordance with the procedure set out for the kind of vehicle in the "National Stationary Exhaust Noise Test Procedures for In-Service Motor Vehicles" — September 2006 (ISBN 1 921168 50 1) published by the Commission.

[Regulation 357 inserted: Gazette 29 Mar 2019 p. 969-70.]

357A. Meaning of *certified to ADR 83/00*

For this Subdivision, a vehicle is ***certified to ADR 83/00*** if —

(a) immediately before the repeal of the *Motor Vehicle Standards Act 1989* (Commonwealth), approval has been given under section 10A of that Act to place an identification plate showing compliance with ADR 83/00 on the vehicle; or

(b) an approval is given under the *Road Vehicle Standards (Consequential and Transitional Provisions) Act 2018* (Commonwealth) Schedule 3 item 4(2) or 6(2); or

(c) the vehicle has satisfied an entry pathway under the *Road Vehicle Standards Act 2018* (Commonwealth)

section 15(2), including compliance with ADR 83/00, and the vehicle is entered on the RAV.

[Regulation 357A inserted: SL 2021/81 r. 15.]

358. Silencing device for exhaust systems

(1) A motor vehicle propelled by an internal combustion engine must be fitted with a silencing device through which all the exhaust from the engine passes.

(2) For subregulation (1), any silencing device designed to be manipulated by the vehicle's operator, such as by means of in-vehicle controls, must be designed so that it can be tested with the device fully opened.

[Regulation 358 inserted: Gazette 29 Mar 2019 p. 970.]

358A. Application of regulations 359 to 361

Regulations 359 to 361 apply to a motor vehicle other than a vehicle certified to ADR 83/00.

[Regulation 358A inserted: Gazette 29 Mar 2019 p. 971.]

359. Stationary noise levels: car-type vehicles and motor cycles and motor tricycles

(1) In this regulation —

car-type vehicle means —

(a) a car; or

(b) a utility truck, panel van or another motor vehicle derived from a car design; or

(c) another motor vehicle with 4 or more wheels that is built mainly to carry not over 9 people including the driver.

(2) The stationary noise level of a car-type vehicle or motor cycle or motor tricycle, must not exceed —

(a) for a car-type vehicle built after 1982 — 90 dB(A); or

(b) for another car-type vehicle — 96 dB(A); or

(c) for a motor cycle or motor tricycle built after February 1985 — 94 dB(A); or

(d) for another motor cycle or motor tricycle — 100 dB(A).

360. Stationary noise levels: other vehicles with spark ignition engines

(1) This regulation applies to a motor vehicle (except a motor vehicle to which regulation 359 applies) with a spark ignition engine.

(2) The stationary noise level of the motor vehicle must not exceed the noise level applying to the vehicle under the Table.

Table

GVM (t)	Exhaust height (mm)	When vehicle built	Noise level (dB(A))
≤ 3.5	< 1 500	before July 1983	92
		after June 1983	89
> 3.5	< 1 500	before July 1983	98
		after June 1983	95
≤ 3.5	≥ 1 500	before July 1983	88
		after June 1983	85
> 3.5	≥ 1 500	before July 1983	94
		after June 1983	91

361. Stationary noise levels: other vehicles with diesel engines

(1) This regulation applies to a motor vehicle (except a motor vehicle to which regulation 359 applies) with a diesel engine.

(2) The stationary noise level of the motor vehicle must not exceed the noise level applying to the vehicle under the Table.

Table

GVM (t)	Exhaust height (mm)	When vehicle built	Noise level (dB(A))
≤ 3.5	< 1 500	before July 1980	105
		after June 1980 but before July 1983	102
		after June 1983	99
> 3.5 but ≤ 12	< 1 500	before July 1980	107
		after June 1980 but before July 1983	104
		after June 1983	101
> 12	< 1 500	before July 1980	109
		after June 1980 but before July 1983	106
		after June 1983	103
≤ 3.5	≥ 1 500	before July 1980	101
		after June 1980 but before July 1983	98
		after June 1983	95
> 3.5 but ≤12	≥ 1 500	before July 1980	103
		after June 1980 but before July 1983	100
		after June 1983	97
> 12	≥ 1 500	before July 1980	105
		after June 1980 but before July 1983	102
		after June 1983	99

361A. Stationary noise levels: vehicles certified to ADR 83/00

The stationary noise level of a motor vehicle that is certified to ADR 83/00 must not exceed, by more than 5 dB(A), the noise level that is established for the motor vehicle when it is certified.

[Regulation 361A inserted: Gazette 29 Mar 2019 p. 971.]

Division 11 — LPG fuel systems

362. LPG-powered vehicles

(1) An LPG system installed in a motor vehicle, and the vehicle, must comply with all relevant requirements set out in the version of AS 1425 *LP Gas fuel systems for vehicle engines* that was current at the time the system was installed in the vehicle.

(2) A motor vehicle that has an LPG system installed must have fixed conspicuously to its front and rear number plates the labels required by the version of AS 1425 *LP Gas fuel systems for vehicle engines* that was current at the time the system was installed in the vehicle.

(3) If a motor vehicle had an LPG system installed before AS 1425 *LP Gas fuel systems for vehicle engines* was first published, the vehicle must have fixed conspicuously to its front and rear number plates a label:

(a) that is made of durable material; and

(b) that is at least 25 mm wide and 25 mm high; and

(c) that is of a reflective red that conforms with either AS 1743 *Road Signs - Specifications* or AS 1906.1 *Retroreflective materials and devices for road traffic control purposes (Part 1: Retroreflective sheeting)*; and

(d) that states “LPGAS” or “LPG”, or similar words or acronyms that have the same meaning, in capital letters at least 6 mm high.

[Regulation 362 inserted: Gazette 29 Mar 2019 p. 971-2.]

362A. Vehicles powered by natural gas

A natural gas system installed in a motor vehicle, and the vehicle, must comply with all relevant requirements set out in the version of AS 2739 *Natural gas (NG) fuel systems for vehicle engines* that was current at the time the system was installed in the vehicle.

[Regulation 362A inserted: Gazette 29 Mar 2019 p. 972.]

Division 11A — Hydrogen-powered vehicles

[Heading inserted: SL 2025/164 r. 7.]

362B. Label requirements for hydrogen-powered vehicles

(1) In this regulation —

hydrogen-powered vehicle means a vehicle that —

(a) is powered by a hydrogen fuel system; and

(b) has 1 or more hydrogen fuel containers fitted to the vehicle for the system.

(2) This regulation applies to a hydrogen-powered vehicle —

(a) built on or after 1 January 2019; or

(b) modified to be a hydrogen-powered vehicle on or after 1 January 2019.

(3) The vehicle must have fixed conspicuously to its front and rear number plates —

(a) for a vehicle fitted with 1 hydrogen fuel container — a label that complies with subregulation (4); or

(b) for a vehicle fitted with 2 or more hydrogen fuel containers — 2 labels that comply with subregulation (4).

(4) For the purposes of subregulation (3), a label complies with this subregulation if —

(a) it is affixed to a plate made of metal that is at least 1 mm thick; and

(b) the label, and the plate to which it is affixed, is a regular pentagonal shape —

(i) each side of which is 20 mm long; and

(ii) each interior angle of which is 108°;

and

(c) it has a yellow surface that complies with class 2 of AS 1906.1:2017 *Retroreflective materials and devices for road traffic control purposes — Retroreflective sheeting*; and

(d) it is marked ‘H’ in a black capital letter that is at least 10 mm high and has the orientation shown in the diagram below; and

(e) it is fixed to the number plates so that the letter on the label is in an upright position; and

(f) it does not wholly or partly obscure any characters on the number plates.

Hydrogen-powered vehicle label

[Regulation 362B inserted: SL 2025/164 r. 7.]

Division 11B — Electric-powered vehicles

[Heading inserted: SL 2025/164 r. 7.]

362C. Label requirements for electric-powered vehicles

(1) In this regulation —

electric-powered vehicle means a vehicle that is powered by 1 or more electric motors or traction motors that —

(a) are the only propulsion system for the vehicle; or

(b) are used in conjunction with another propulsion system for the vehicle.

(2) This regulation —

(a) applies to an electric-powered vehicle —

(i) built on or after 1 January 2019; or

(ii) modified to be an electric-powered vehicle on or after 1 January 2019;

but

(b) does not apply to a vehicle to which regulation 362B applies (even if the vehicle is fitted with an electric motor or traction motor that is used in conjunction with a hydrogen fuel system for the propulsion of the vehicle).

(3) The vehicle must have fixed conspicuously to its front and rear number plates a label that complies with subregulation (4).

(4) For the purposes of subregulation (3), a label complies with this subregulation if —

(a) it is affixed to a plate made of metal that is at least 1 mm thick; and

(b) the label, and the plate to which it is affixed, is an equilateral triangular shape —

(i) each side of which is 30 mm long; and

(ii) each interior angle of which is 60°;

and

(c) it has a blue surface that complies with class 2 of AS 1906.1:2017 *Retroreflective materials and devices for road traffic control purposes — Retroreflective sheeting*; and

(d) it is marked ‘EV’ in white capital letters that are at least 8 mm high and have the orientation shown in the diagram below; and

(e) it is fixed to the number plates so that the letters on the label are in an upright position; and

(f) it does not wholly or partly obscure any characters on the number plates.

Electric-powered vehicle label

[Regulation 362C inserted: SL 2025/164 r. 7.]

Division 12 — Maximum road speed limiting

363. Speed limiting for certain heavy vehicles

(1) A bus with a GVM of more than 14.5 t that was built after 1987 must comply with third edition ADR 65.

(2) A prime mover with a GVM of more than 15 t that was built after 1987 must comply with third edition ADR 65.

(3) For third edition ADR 65, the maximum road speed capability of a motor vehicle used in a road train is 100 km/h.

(4) Subregulations (1), (2) and (3) do not apply to these —

(a) an emergency vehicle;

(b) a bus fitted with hand grips or similar equipment for standing passengers to hold;

(c) a 2-axle prime mover if —

(i) it was built after 1987 but before July 1991; and

(ii) the responsible person for it is a person who uses it for agriculture, horticulture or other primary production activities (except forestry, fishing and mining).

[Regulation 363 amended: SL 2022/174 r. 5.]

Division 13 — Mechanical connections between vehicles

Subdivision 1 — Coupling requirements for all motor vehicles, trailers and combinations

364. General coupling requirements

(1) A fifth wheel coupling, the mating parts of a coupling, a kingpin or a towbar must not be used for a load more than the manufacturer's load rating.

(2) A kingpin must be used only with a fifth wheel coupling that has a corresponding jaw size.

(3) The mating parts of a coupling used to connect a semi-trailer to a towing vehicle must not allow the semi-trailer to roll to an extent that makes the towing vehicle unstable.

365. Trailer connections

(1) A trailer must be securely coupled to the vehicle in front of it.

(2) The components of a coupling used between vehicles must be compatible and properly connected to each other.

366. Drawbar couplings

(1) A coupling for attaching a trailer, except a semi-trailer or pole-type trailer, to a towing vehicle must be built and fitted so —

(a) the coupling is equipped with a positive locking mechanism; and

(b) the positive locking mechanism can be released regardless of the angle of the trailer to the towing vehicle.

(2) If the trailer is in a combination and is not fitted with breakaway brakes in accordance with regulation 340(3), it must be connected to the towing vehicle by at least one chain, cable or other flexible device, as well as the coupling required by subregulation (1).

(3) A connector must be built and fitted so —

(a) the trailer is kept in tow if the coupling breaks or accidentally detaches; and

(b) normal angular movement of the coupling is permitted without unnecessary slack.

(4) If practicable, a connector must be built and fitted so the drawbar of the trailer is prevented from hitting the ground if the coupling accidentally detaches.

(5) In subregulations (3) and (4) —

connector means any thing that connects a trailer and a towing vehicle and includes any of these —

(a) a chain;

(b) a cable;

(c) a thing fixed to a trailer or a towing vehicle to which a chain is attached;

(d) a shackle.

Subdivision 2 — Additional coupling requirements for B-doubles and long road trains

367. Various kingpins

In this Subdivision —

50 mm kingpin means a kingpin meeting the dimension requirements for a 50 mm kingpin in AS 2175-1990 *Articulated Vehicles — Kingpins*;

75 mm kingpin means a kingpin with the dimensions mentioned in regulation 373(3);

90 mm kingpin means a kingpin meeting the dimension requirements for a 90 mm kingpin in AS 2175-1990 *Articulated Vehicles — Kingpins*;

road train means a road train that exceeds 19 m in length.

368. Couplings for B-doubles and road trains

(1) A fifth wheel coupling used to connect a towing vehicle to a semi-trailer used in a B-double or road train must not be built with a pivot that allows a semi-trailer to roll relative to the towing vehicle.

(2) However, subregulation (1) does not apply to a fifth wheel coupling if —

(a) the semi-trailer design requires torsional stresses to be minimised; and

(b) the roll axis of the fifth wheel coupling is above the surface of the coupler plate; and

(c) the degree of rotation allowed around the roll axis of the fifth wheel coupling is restricted to prevent roll instability.

(3) A trailer with only one axle group or a single axle (except a semi-trailer or a converter dolly) that is used in a road train must not have a coupling fitted at its rear.

369. Selection of fifth wheel couplings for B-doubles and road trains

(1) A fifth wheel coupling used in a B-double or road train must have a D-value complying with AS 1773-1990 *Articulated Vehicles — Fifth Wheel Assemblies*.

(2) A turntable used in a B-double or road train must have a D-value complying with AS 1773-1990 *Articulated Vehicles — Fifth Wheel Assemblies*.

(3) If a fifth wheel coupling used in a B-double or road train is built for a 50 mm kingpin or 90 mm kingpin, the coupling must —

(a) meet the dimension requirements in AS 1773-1990 *Articulated Vehicles — Fifth Wheel Assemblies*; and

(b) not be worn away more than recommended by the standard.

(4) If a fifth wheel coupling used in a B-double or road train is built for a 75 mm kingpin, the coupling must —

(a) be compatible with the kingpin mentioned in regulation 373(3); and

(b) not be worn away so that it does not comply with regulation 370.

370. D-value of a fifth wheel coupling

In testing a fifth wheel coupling built for a 75 mm kingpin used in a B-double or road train to decide whether its D-value complies with regulation 369(1), the longitudinal movement (after readjusting the jaws of the coupling using a kingpin built to the dimensions mentioned in regulation 373(3)(a)) must not be over 4 mm.

371. Mounting of fifth wheel couplings on B-doubles and road trains

A fifth wheel coupling must be mounted on a prime mover or a semi-trailer used in a B-double or road train in accordance with AS 1771-1987 *Installation of Fifth Wheel and Turntable Assemblies*.

372. Branding of fifth wheel couplings and turntables on B-doubles and road trains

(1) A fifth wheel coupling on a vehicle built after June 1991 forming part of a B-double or road train must be clearly and permanently marked in accordance with AS 1773-1990 *Articulated Vehicles — Fifth Wheel Assemblies* with —

(a) the name or trademark of its manufacturer; and

(b) its D-value rating; and

(c) its nominal size.

(2) A turntable used in a vehicle built after 1 November 2002 that forms part of a B-double or road train must be marked with —

(a) the name or trademark of the turntable's manufacturer; and

(b) the D-value rating of the turntable in accordance with AS 1773-1990 *Articulated Vehicles — Fifth Wheel Assemblies*.

373. Selection of kingpins for B-doubles and road trains

(1) A kingpin used in a B-double or road train must —

(a) be a 50 mm kingpin, 75 mm kingpin or 90 mm kingpin; and

(b) have a D-value complying with AS 2175-1990 *Articulated Vehicles — Kingpins*.

(2) A 50 mm kingpin or 90 mm kingpin used in a B-double or road train must —

(a) be built to meet the dimension requirements in AS 2175-1990 *Articulated Vehicles — Kingpins*; and

(b) not be worn away more than recommended by the standard.

(3) A 75 mm kingpin used in a B-double or road train must —

(a) be built to meet the dimensions in the essential diagram; and

(b) not be worn away more than mentioned in subregulation (4).

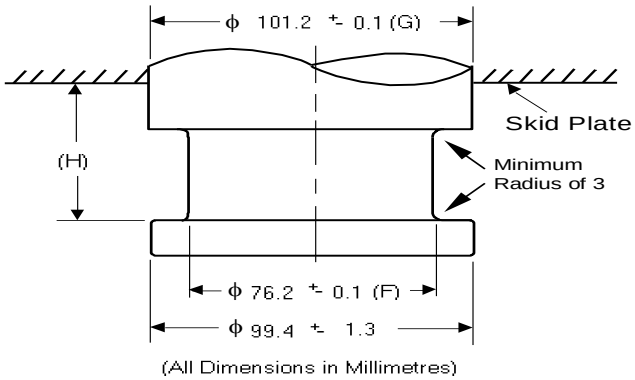

Dimensions of a 75 mm kingpin

(4) In testing a 75 mm kingpin mentioned in the essential diagram in subregulation (3) to decide whether its D-value complies with subregulation (1)(b) —

(a) diameter F must not wear more than 3 mm; and

(b) diameter G must not wear more than 2 mm; and

(c) height H must not wear more than 2.3 mm.

374. Attachment of kingpins on B-doubles and road trains

A kingpin used in a trailer that forms part of a B-double or road train must be attached in accordance with —

(a) the manufacturer's specifications and instructions; or

(b) the guidelines detailed in AS 2175-1990 *Articulated Vehicles — Kingpins*.

375. Branding of kingpins on B-doubles and road trains

A kingpin used in a trailer built after June 1991 that forms part of a B-double or road train must be clearly and permanently marked on the lower circular face of the kingpin in accordance with AS 2175-1990 *Articulated Vehicles — Kingpins* with —

(a) the name or trademark of its manufacturer; and

(b) its D-value rating; and

(c) its nominal size.

376. Selection of couplings and drawbar eyes for road trains

A drawbar-type coupling or drawbar eye used in a road train must —

(a) be a 50 mm pin type; and

(b) have a D-value complying with AS 2213-1984 *50 mm Pin Type Couplings and Drawbar Eyes for Trailers*; and

(c) be built to the dimensions mentioned in the standard; and

(d) not be worn away more than is recommended in the standard.

377. Attachment of couplings and drawbar eyes on road trains

A drawbar-type coupling or drawbar eye used in a road train must be built and positioned so —

(a) when the road train is moving, the drawbar can move at least 15° upwards or downwards from the position it occupies when the road train is parked on level ground; and

(b) the pivot point of the coupling is not over 300 mm forward of the rear of the trailer to which it is attached; and

(c) it is at a height of at least 800 mm, but not over 950 mm, when the road train is unloaded and parked on level ground.

378. Branding of couplings and drawbar eyes on road trains

A drawbar-type coupling or drawbar eye used on a vehicle built after June 1991 that forms part of a road train must be clearly and permanently marked in accordance with AS 2213-1984 *50 mm Pin Type Couplings and Drawbar Eyes for Trailers* with —

(a) the name or trademark of its manufacturer; and

(b) its D-value rating.

379. Tow coupling overhang on road trains

(1) In this regulation —

tow coupling overhang of a vehicle means the horizontal distance from the centre of the axle group, or the centre of the single axle, at the rear of the vehicle to the pivot point of the coupling near the rear of the vehicle.

(2) The tow coupling overhang of a motor vehicle, except a prime mover, used in a road train must not be more than the greater of these distances —

(a) 30% of the distance from the centre of the front axle to the centre of the axle group or single axle at the rear of the vehicle;

(b) 2.7 m.

(3) The tow coupling overhang of a semi-trailer, or a dog trailer consisting of a semi-trailer and converter dolly, used in a road train must not be more than 30% of the distance from the point of articulation to the centre of the axle group or single axle at the rear of the vehicle.

(4) The tow coupling overhang of another dog trailer used in a road train must not be more than 30% of the distance from the centre of the front axle group or single axle to the centre of the axle group or single axle at the rear of the vehicle.

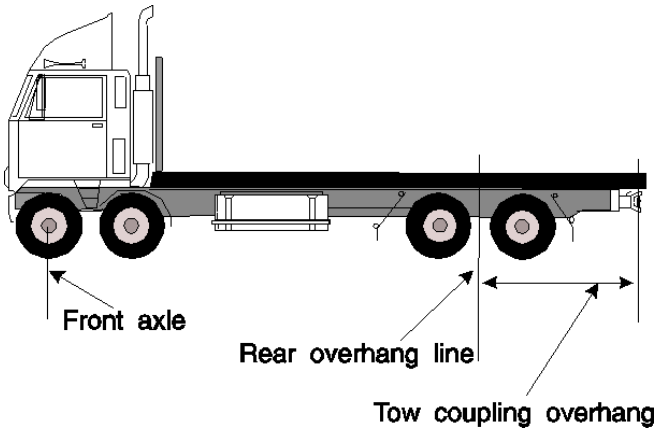

Tow coupling overhang

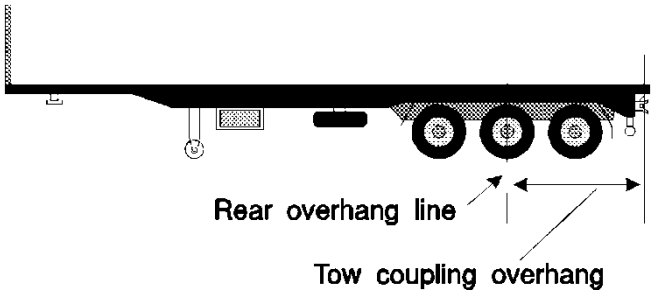

Tow coupling overhang —
semi-trailer with extra coupling at rear

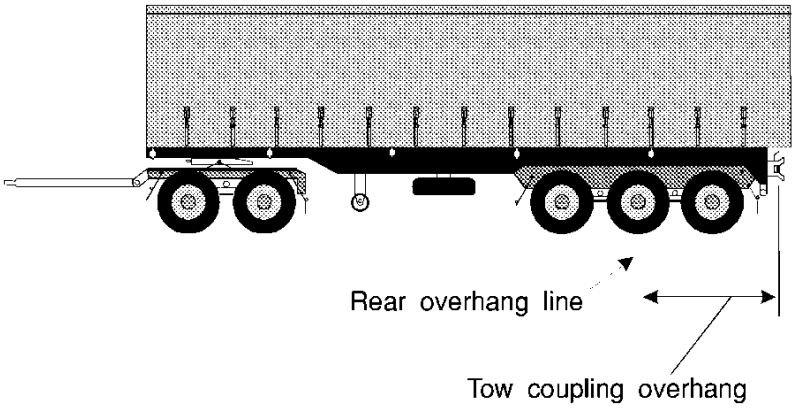

Tow coupling overhang — dog trailer

Division 14 — Omnibuses, illuminated signs, immobilisers, compliance plates

380. Passengers on omnibus with minimum 1.5 m interior height

(1) In this regulation —

omnibus means an omnibus with an interior height of 1.5 m or more.

(2) The maximum number of passengers that an omnibus is permitted to carry is the least of these numbers —

(a) the number equal to the total number of seating and standing positions recommended for the omnibus by the manufacturer;

(b) the greatest number that does not permit the potential loaded mass of the omnibus to exceed its GVM;

(c) if the number that is the lesser of paragraphs (a) and (b) is likely to jeopardise the safety of the passengers in circumstances in which the omnibus is likely to be used — the greatest number compatible with promoting the safety of those passengers, as determined by the CEO.

(3) The potential loaded mass of an omnibus is the amount, in kilograms, equal to M in the formula —

$$M = (P \times L) + T$$

where —

P is the number of standing and seating positions recommended for the omnibus by the manufacturer;

L is —

(a) if provision is made on the omnibus for hand luggage and other luggage — 80;

(b) if no provision is made on the omnibus for any luggage except hand luggage — 65;

T is the unloaded mass of the omnibus.

381. Passengers on omnibus with less than 1.5 m interior height

The total number of passengers that an omnibus with an interior height of less than 1.5 m is permitted to carry is the adult seating capacity of that omnibus.

382. Display of number of passengers permitted on omnibuses

The number of passengers an omnibus is permitted to carry under regulation 380(2) or 381 must be clearly displayed on the interior of the omnibus in letters and numerals that are at least 25 mm in height.

383. Omnibus standing positions and equipment

(1) A standing position on an omnibus must be floor space with these qualities —

(a) the floor space must be rearward of the driver's seat;

(b) there must be a handhold that is easily accessible to a person standing in that floor space;

(c) the floor space must be greater than 380 mm in width and length;

(d) the floor must be of a gradient less than 1:16;

(e) the floor must not be part of any step at a doorway or an area within the opening radius of a door;

(f) the floor space must be at least 200 mm in front of any seat cushions.

(2) Floor space for a wheelchair may be regarded as one or more "standing positions" if it is not being occupied by a wheelchair.

(3) Handholds must satisfy these criteria —

(a) there must be at least one for each nominated standing position;

(b) the handhold must be in the form of a handrail, a seat "corner grip", a stirrup-type strap, a stanchion or an overhead hand strap, all of which are subject to the approval of the CEO;

(c) the handholds must be on either side of the omnibus and, in the CEO's opinion, readily accessible to a passenger in a standing position to which the handhold relates;

(d) the CEO must be of the opinion that the handholds are safe, sufficiently supportive and are associated with appropriate floor space.

384. Omnibus destination signs

When an omnibus other than a school bus is plying for hire, the name of its destination —

(a) must be clearly and conspicuously exhibited on the destination sign fitted to the omnibus; and

(b) must be capable of being read, in the daytime or when illuminated at night, at a distance of 27 m.

385. School bus exterior colours and signs

The exterior of a school bus —

(a) must be painted in a predominantly orange colour relieved with green on the body, with the roof painted cream or white; and

(b) must have the words “SCHOOL BUS” conspicuously painted on both the front and rear, in letters of not less than 100 mm in height, unless the school bus is fitted with warning lights or signs under Division 8 Subdivision 18.

386. First aid kit on non-metropolitan omnibus

An omnibus operating on a route all or most of which lies outside the metropolitan region must be equipped with a comprehensive and serviceable first aid kit, carried in a position on the vehicle so as to be readily available for use.

387. Fitting of illuminated signs to certain vehicles

(1) In addition to the lights prescribed or permitted under Division 8 —

(a) an omnibus may be equipped with a light or lights for lighting a sign indicating the route, destination or other necessary information relating to the omnibus; and

(b) an on-demand vehicle (as defined in the *Transport (Road Passenger Services) Act 2018* section 4(1)) may be equipped with a light or lights for the lighting of any sign authorised or required to be displayed on the vehicle by the *Transport (Road Passenger Services) Regulations 2020*; and

(c) a vehicle that is —

(i) an emergency vehicle; or

(ii) a motor breakdown service vehicle,

may be equipped with a light or lights for lighting a sign ordinarily displayed by that vehicle; and

(d) any other motor vehicle, trailer or vehicle in a combination may be equipped with a light or lights for lighting a sign on that vehicle if the sign —

(i) is mounted on the roof of the vehicle or on a bar across the roof; and

(ii) is fitted with no more than 2 globes each of 7 W or less.

(2) Lights fitted to a vehicle mentioned in subregulation (1)(b) for the purpose of illuminating a sign may be fitted so as to have the capacity to display intermittent flashes in the circumstances prescribed under the *Road Traffic Code 2000* regulation 289.

(3) Lights fitted to a vehicle mentioned in subregulation (1)(c) for the purpose of illuminating a sign may be fitted so as to have the capacity to display intermittent flashes when other flashing warning lights fitted to that vehicle are activated but not otherwise.

[Regulation 387 amended: Gazette 26 Jun 2019 p. 2237-8; SL 2020/91 r. 14.]

388. Required immobilisers for certain motor vehicles

(1) This regulation applies to a car, an omnibus or a goods vehicle unless —

(a) the vehicle has an unloaded mass of 3 t or more; or

(b) the vehicle is a heavy vehicle; or

(c) the vehicle was built 25 years or more before the time the application for the grant or transfer of the licence for the vehicle is made; or

(d) the application has been made in relation to the vehicle —

(i) for the grant or transfer of a licence to a dealer in the circumstances mentioned in the *Duties Act 2008* section 246(1), (2) or (~~2~~3); or

(ii) for the grant or transfer of a licence arising out of a transaction involving a deceased estate mentioned in the *Duties Act 2008* section 139; or

(iii) for the transfer of a licence under a judgment or order of a court.

(2) A motor vehicle in relation to which an application is made for the grant or transfer of the licence for the vehicle must be fitted with one of these immobilisers —

(a) an immobiliser fitted to a vehicle by the manufacturer of the vehicle or a person authorised by the manufacturer, at the time the vehicle is being manufactured;

(b) an immobiliser that complies with Part III (“Approval of immobilisers and approval of a vehicle with regard to its immobiliser”) of ECE 97 “Vehicle Alarm Systems” published by the United Nations Economic Commission for Europe;

(c) an immobiliser fitted to a vehicle as an integral part of an alarm system complying with Australian/New Zealand Standard AS/NZS 3749.1:1997 *Intruder alarm systems — Road vehicles*, jointly published by Standards Australia and Standards New Zealand;

(d) an immobiliser that complies with Australian/New Zealand Standard AS/NZS 4601:1999 *Vehicle immobilisers*, jointly published by Standards Australia and Standards New Zealand;

(e) an immobiliser —

(i) fitted to a vehicle before 1 July 1999; and

(ii) that is self-arming and immobilises the engine either by interrupting the fuel, ignition, starter or engine management system;

(f) an immobiliser —

(i) fitted to a vehicle before 1 January 2001; and

(ii) that complies with "Specifications for Vehicle Immobiliser" published by the Department of Transport on 4 August 2000 and available from its Vehicle Safety Branch at 21 Murray Road South, Welshpool WA 6106;

(g) a device known as the "GT2000 Gearlock Auto-armed Pinlock", manufactured by "Grip-Tech (Pty) Ltd", that is fitted to a vehicle in accordance with the manufacturer's instructions.

(3) If a vehicle is required under subregulation (2) to be fitted with a prescribed immobiliser at the time an application is made, the immobiliser must remain fitted to the vehicle after that time.

[Regulation 388 amended: SL 2026/204 r. 12.]

389. Compliance plates

(1) If an ADR other than a third edition ADR applies to the design and construction of a vehicle, the vehicle must be fitted with a compliance plate.

(2) Subregulation (1) does not apply if the vehicle has satisfied an entry pathway under the *Road Vehicle Standards Act 2018* (Commonwealth) section 15(2) and the vehicle is entered on the RAV.

[Regulation 389 amended: SL 2021/81 r. 16.]

Part 11 — Standards and requirements for animal drawn vehicles and bicycles

Division 1 — Animal drawn vehicles

390. Terms used

In this Division, unless the contrary intention appears —

animal drawn vehicle means a vehicle built to be drawn, or being drawn, by an animal;

pole-type trailer means a conveyance built to be drawn, or being drawn, behind an animal that —

(a) is attached to the animal by a pole, or an attachment fitted to a pole; and

(b) is ordinarily used for transporting loads comprising logs, pipes, structural members or other long objects that can generally support themselves like beams between supports.

391. Light visibility

A reference in this Division to the visibility or showing of a light is a reference to its capacity to be seen under normal atmospheric conditions at night.

392. Compliance with standards and requirements

A person must not drive an animal drawn vehicle unless the vehicle complies with each regulation in this Division that applies to the vehicle.

Penalty: a fine of 4 PU.

Modified penalty: 1 PU.

393. Front and rear lights

(1) A two-wheeled animal drawn vehicle at night must be equipped on opposite sides with 2 lamps capable of showing a bright

white light to the front of the vehicle and a red light to the rear of the vehicle.

(2) A four-wheeled animal drawn vehicle, or an animal drawn vehicle having more than 4 wheels, other than a pole-type trailer, on a road at night must be equipped —

(a) with 2 lamps capable of showing a bright white light to the front of the vehicle located on opposite sides at the front of the vehicle, at a height of not more than 1.9 m from the ground; and

(b) with a lamp capable of showing a bright red light to the rear of the vehicle located at the rear, centre or right of the vehicle at a height of not more than 1.5 m from the ground.

(3) A pole-type trailer on a road at night must be equipped —

(a) with 2 lighted lamps capable of showing a bright white light visible to the front of the vehicle and located on opposite sides at the front of the vehicle at a height of not more than 1.9 m from the ground; and

(b) with a lamp capable of showing a bright red light to the rear of the vehicle located on the rear end of the pole of the trailer.

394. Rear reflectors

(1) In addition to the rear light prescribed by regulation 393, there must be symmetrically fitted to each side of the rear of an animal drawn vehicle on a road at night a reflector, that —

(a) is so located that it is not higher than 1.5 m from the ground; and

(b) is capable of projecting a red reflection of light from the lamp of any following vehicle.

(2) Subregulation (1) does not apply to an animal drawn vehicle to which a reflector is affixed in accordance with regulation 396.

395. Front clearance lamps

(1) An animal drawn vehicle on a road at night that, together with its load is 2.2 m or more in width, must be equipped on each side of the front of the vehicle with a lamp capable of showing a white light only, to the front of the vehicle.

(2) The lamps prescribed by subregulation (1) must be fitted, so that no part of the vehicle or its load on the side of the vehicle to which the lamp is fitted, projects more than 150 mm laterally from the centre of the lamp.

(3) Subregulations (1) and (2) do not apply to an animal drawn vehicle, of which no part, including its load on either side, projects more than 150 mm laterally from the centre of a lighted lamp, fitted in accordance with regulation 393.

(4) If an animal drawn vehicle on a road at night drawing a trailer that, together with its load, is 2.2 m or more in width, or that projects 150 mm or more on either side, beyond the width of the vehicle drawing it, then, in addition to any other requirement of these regulations relating to lights, a lamp, capable of showing a white light, only to the front, must be fitted to each side of the front of the trailer, in a manner so that no part of the trailer or its load, on the side to which the lamp is fitted, projects more than 150 mm laterally from the centre of the lamp.

396. Rear clearance lamps or reflectors

(1) An animal drawn vehicle on a road at night that, together with its load is 2.2 m or more in width must have a lamp or reflector fitted to each side at the rear of the vehicle or, in the case of a vehicle and trailer, at the rear of the trailer.

(2) The lamp or reflector must —

(a) be so placed that it is not higher than 1.5 m from the ground and no part of the vehicle or its load or, in the case of a vehicle drawing a trailer, no part of the trailer, and no part of any load on either vehicle or trailer, on

the side on which the lamp or reflector is fitted, projects more than 150 mm laterally from the centre of the lamp or reflector; and

(b) be capable of showing a clear red light to the rear and no other light.

397. Requirements in regard to reflectors

A reflector required to be fitted to an animal drawn vehicle under regulations 394 and 396 must —

(a) have a diameter of not less than 32 mm and, if not circular, be of a size that a circle 32 mm in diameter might be described on its surface; and

(b) give a red reflection that is clearly visible to the driver of a vehicle to which a headlamp complying with the provisions of Part 10 and applicable to motor vehicles is fitted when light from the headlamp is projected directly on to the reflector from a distance not exceeding 100 m; and

(c) if rectangular, be fitted in a vertical position; and

(d) be unobscured and in a clean condition.

398. Light on projecting load

(1) If the load of an animal drawn vehicle on a road at night projects more than 1.2 m beyond the rearmost portion of the vehicle, or if the load of a pole-type trailer projects beyond the rear end of the pole, a lamp capable of showing a clear red light must be fitted upon the extreme rear of the load.

(2) The light required by this regulation to be fitted is in addition to the rear light required by regulation 393, and a person must not place the rear light required by regulation 393 upon the extreme end of the load.

399. Dimension requirements for animal drawn vehicles and their loads

(1) An animal drawn vehicle together with its load must not exceed 12 m in length, 2.5 m in width or 4 m in height.

(2) No part of an animal drawn vehicle or its load must project —

(a) past the head of a horse or other animal drawing the vehicle; or

(b) more than 1.2 m backward of the body of a two-wheeled vehicle, or more than 1.2 m backward of the body, or the rear wheels, of a four-wheeled vehicle; or

(c) more than 300 mm from the outer extremity of the wheels or body of the vehicle.

(3) Despite subregulations (1) and (2), a load not exceeding 8 m in length, may project more than 1.2 m to the rear of an animal drawn vehicle, if a red flag of not less than 300 mm squared, or a red metal disc, of not less than 225 mm in diameter, is carried at the extreme rear end of the load and the flag or disc is kept clearly visible to persons on the road, in the near vicinity of the vehicle.

400. Brakes

(1) An efficient brake capable of stopping and holding an animal drawn vehicle must be fitted in some convenient part of the vehicle, but an animal drawn vehicle having 2 wheels and drawn by an animal attached to the vehicle by harness, that is suitable and sufficient to keep the animal attached to the vehicle, must be taken to be equipped with an efficient brake.

(2) An animal drawn vehicle exceeding one tonne in mass must not have a nave brake.

Division 2 — Bicycles

401. Compliance with standards and requirements

(1) A person must not ride a bicycle on a road unless the bicycle complies with each regulation in this Division that applies to the bicycle.

Penalty: a fine of 4 PU.

Modified penalty: 1 PU.

(2) An alleged offender against subregulation (1) who is under 14 years of age must not be dealt with by way of an infringement notice and modified penalty.

402. Brakes

A bicycle must be capable of being braked by either or both of these means —

(a) an effective foot brake operated by turning the pedals in the reverse direction;

(b) an effective hand operated brake fitted to the rear wheel having the operating handle fixed in a position providing for convenient operation.

403. Bell

A bicycle must have a bell or other effective warning device fixed in a convenient position.

404. Handlebar

The handlebar of a bicycle must extend not less than 180 mm nor more than 400 mm on each side of the centre of the bicycle and the height of the uppermost point of the handlebar must not exceed the height of the uppermost part of the seat by more than 300 mm.

[Regulation 404 amended: SL 2022/130 r. 4.]

405. Rake and angle of front forks

The horizontal distance between the axle of the front wheel of a bicycle and a line dropped vertically from the centre of the pivot head bearing on the front tube of the frame must not exceed 250 mm.

406. Dimension requirements for bicycles and their loads

The overall width of any equipment or load carried on a bicycle must not exceed 800 mm.

[Regulation 406 amended: SL 2022/130 r. 5.]

407. Child-carrying seats

Any child-carrying seat on a bicycle —

(a) must be securely attached to the frame of the bicycle; and

(b) must be soundly constructed without sharp edges or protrusions; and

(c) must not be located on the handlebars; and

(d) if attached in close proximity to a wheel must be fitted with a guard to prevent any part of the occupant of the seat from contacting any moving part of the bicycle; and

(e) must be fitted with —

(i) a footrest or other device to steady the occupant; and

(ii) a restraining device that cannot be easily or accidentally released by the occupant of the seat.

Part 12 — Tow trucks and towed vehicles

Division 1 — Standards and requirements in respect of tow trucks

407A. ~~Terms~~Term used: tilt tray tow truck

In this Part —

tilt tray tow truck means a tow truck that is equipped with —

(a) a fixed or tilting platform or tray for the carriage of a ~~motor~~ vehicle; and

(b) a winch for loading a ~~motor~~ vehicle onto the platform or tray.

[Regulation 407A inserted: SL 2022/174 r. ~~6~~6; amended: SL 2026/204 r. 13.]

408. Compliance with standards and requirements

(1) A person must not use or drive a tow truck or operate a vehicle as a tow truck unless the vehicle licence for the tow truck or vehicle allows it to be used as a tow truck.

(2) A person must not use or drive a tow truck or operate a vehicle as a tow truck unless the tow truck and the vehicle being towed comply with each regulation in this Division that applies to the tow truck or the vehicle being towed.

Penalty applicable to subregulations (1) and (2):

(a) for a first offence, a fine of 2 PU;

(b) for a second or subsequent offence, a fine of 4 PU.

409. General equipment

(1A) In this regulation —

address means —

(a) a residential or business address; or

(b) a post office box address.

(1) A tow truck must be fitted with dual wheels on the rear axle or axles on both the left and right sides of the vehicle.

(2) A tow truck must have its steering wheel on the right side of the vehicle.

(3) The driver's seat on a tow truck must be so constructed that no person can occupy any portion of the seat on the right hand side of the driver.

(4) A tow truck must be equipped with equipment of a type approved by the CEO to enable the driver of the tow truck to exercise efficient control over the towed vehicle while it is being towed.

(5) A tow truck must be equipped with a fire extinguisher of a type and capacity approved by the CEO and maintained in an effective condition and installed in a position where it is readily available for use.

(6) A tow truck must be equipped with a broom and other equipment of a type approved by the CEO necessary for the removal of any broken glass, debris, oil or other matter deposited on the roadway as a result of an accident or breakdown.

(7) A tow truck must have clearly marked on a conspicuous part of the right side of the vehicle, in a type and form approved by the CEO —

(a) the name and address of the owner of the vehicle; and

(b) the vehicle's unloaded mass and GVM; and

(c) the vehicle's classification under regulation 414.

(8) A tilt tray tow truck must be fitted with a rear underrun protective device of a type approved by the CEO.

[Regulation 409 amended: SL 2022/174 r. 7.]

410. Lights, warning devices and signs

(1) A tow truck must be equipped with —

(a) a flashing amber light for use in circumstances mentioned in the *Road Traffic Code 2000* and not otherwise; and

(b) a suitable adjustable white light mounted so that at night it is capable of effectively illuminating the area in which the coupling of the tow truck to any vehicle to be lifted or towed is to be effected, in addition to the vehicle lights and reflectors required under these regulations with respect to motor vehicles generally.

(2) A tow truck must have equipment which can be placed on the towed vehicle and connected electrically to the towing vehicle of a kind that enables the requirements of these regulations relating to lights to be observed by both vehicles whilst a vehicle is being towed.

(3) A tow truck must be equipped with at least 3 portable warning devices of a type approved by the CEO.

(4) The driver of a tow truck that is towing a heavy vehicle must ensure that the heavy vehicle displays a warning sign of a type and placement approved by the CEO.

[Regulation 410 amended: SL 2022/147 r. 8.]

*[**411-413.** Deleted: SL 2022/174. r 9.]*

414. Classification and limitation

(1) In this regulation —

load capacity, in relation to a vehicle, means the difference between its GVM and its unloaded mass.

(2) Tow trucks other than tilt tray tow trucks must be classified in accordance with these specifications —

Class 1 —

Tow trucks having a load capacity of not less than 1 270 kg and fitted with a crane having a safe working load of not less than 1 045 kg.

Class 2 —

Tow trucks having a load capacity of not less than 3 040 kg and fitted with a crane having a safe working load of not less than 2 540 kg.

Class 3 —

Tow trucks having a load capacity of not less than 6 125 kg, fitted with a crane having a safe working load of not less than 5 080 kg and having a minimum GCM of 18 t.

Class 4 —

Tow trucks having a load capacity of not less than 7 t, fitted with a crane having a safe working load of not less than 7 t and having a minimum GCM of 60 t.

(2A) Tilt tray tow trucks must be classified in accordance with these specifications —

Class 1T —

Tilt tray tow trucks having a load capacity of not less than 1 270 kg and fitted with a winch having a safe working load of not less than 1 045 kg.

Class 2T —

Tilt tray tow trucks having a load capacity of not less than 3 040 kg and fitted with a winch having a safe working load of not less than 2 540 kg.

Class 3T —

Tilt tray tow trucks having a load capacity of not less than 6 125 kg and fitted with a winch having a safe working load of not less than 5 080 kg.

Class 4T —

Tilt tray tow trucks having a load capacity of not less than 12 t and fitted with a winch having a safe working load of not less than 7 t.

(3) A tow truck is limited to the lifting, carrying, towing or salvaging of vehicles having a gross mass appropriate to the load capacity of the tow truck, and must not be operated so as to exceed these limits —

Class of tow truck	Gross mass of vehicle
1, 1T	2 030 kg
2, 2T	5 080 kg

[Regulation 414 amended: SL 2022/174 r. 10.]

415. Lifting requirements

(1A) In this regulation —

lifting apparatus means a crane, winch, ramp or other lifting or loading device that is capable of elevating a ~~motor~~ vehicle to a higher position or level.

(1) The GVM of any vehicle being lifted must not be more than the GVM of the tow truck.

(2) The mass supported by the lifting apparatus of a tow truck must not be more than the safe working load of that lifting apparatus.

(3) When a vehicle has been partially but not fully lifted for towing by a tow truck, it must be supported by means other than the

hoist rope or chain of the lifting apparatus and some of the mass must be taken on at least 2 wheels or a single axle of the towed vehicle before the tow truck is put in motion.

(4) When a vehicle has been fully lifted for towing by a tow truck, it must be wholly supported on the carrying area of the tow truck, or on a trailer approved by the CEO for that purpose, and adequately secured before the tow truck is put in motion.

(4A) A lifting apparatus must be provided with adequate means for supporting the load in its raised position while under tow.

(5) A towed vehicle must not be supported by the hoist rope or chain of a lifting apparatus whilst the tow truck is in motion.

(6) Despite subregulation (4), a tow truck must not be used to lift and carry a vehicle which is so damaged that it cannot be safely towed on any 2 wheels of a single axle unless that tow truck has been approved by the CEO for the purpose.

[Regulation 415 amended: SL 2022/174 r. ~~11~~11; SL 2026/204 r. 14.]

[416. *Deleted: SL 2022/174. r. 12.]*

417. Brakes of towed vehicle

(1A) Except as provided in subregulation (2), (3) or (3A), the driver of a Class 3 or Class 4 tow truck towing a vehicle must have control of the braking system of the towed vehicle.

Penalty for this subregulation:

(a) for a first offence, a fine of 2 PU;

(b) for a second or subsequent offence, a fine of 4 PU.

(1) In the case of a Class 3 or Class 4 tow truck towing a vehicle of which the driver of the tow truck has control of the braking system, and the brakes can be used, there is no limitation on the mass of the towed vehicle.

(2) If a Class 3 or Class 4 tow truck is required to tow a vehicle which is damaged so as to prevent coupling of the braking system to the tow truck, the brakes may be operated from the driving position of the towed vehicle.

(3) If a vehicle is so damaged as to prevent the braking system from being used, a police officer may authorise the vehicle to be towed, by a tow truck of the appropriate class, to the nearest place of safety.

(3A) In the case of a tilt tray tow truck towing a vehicle by means of an underlift system in circumstances where the driver of the tow truck does not have control of the braking system of the towed vehicle, the maximum combined mass of the tilt tray tow truck and the towed vehicle must not exceed the lesser of the following —

(a) the tilt tray tow truck GVM plus its towing capacity;

(b) if the tilt tray tow truck towing capacity is not specified by the manufacturer — the tilt tray tow truck GVM plus 750 kg;

(c) the tilt tray tow truck GCM.

(4) A person must not alter the setting of the brake (slack) adjusters of a vehicle fitted with maxi-spring emergency/parking brakes for the purpose of towing the vehicle.

Penalty for this subregulation:

(a) for a first offence, a fine of 2 PU;

(b) for a second or subsequent offence, a fine of 4 PU.

[Regulation 417 amended: SL 2022/174 r. 13.]

Division 2 — Authorisation to tow articulated vehicle

[Heading inserted: SL 2025/4 r. 4.]

418. Towing articulated vehicles

(1) In this regulation —

articulated vehicle has the meaning given in the *Road Traffic Code 2000* regulation 3(1).

(2) A Class 3 or Class 4 tow truck may, with the permission of a police officer or the Commissioner of Main Roads, tow a disabled articulated vehicle to a place where it will not constitute a hazard to traffic or to any person if, in the opinion of that police officer or the Commissioner, it would not be safe to uncouple the vehicle to tow part only of the vehicle.

(3) A police officer who, under subregulation (2), authorises the towing of an articulated vehicle —

(a) may impose conditions about the towing including conditions relating to the route to be taken or the speed at which the vehicle is to be towed; and

(b) unless the police officer intends to be present throughout the towing operation, must give the driver of the tow truck written authorisation containing these particulars —

(i) the tow truck's number plate details;

(ii) the identifying particulars of the articulated vehicle to be towed;

(iii) the place from where the articulated vehicle is to be moved;

(iv) the place to where the articulated vehicle is to be moved;

(v) the date, time, and period during which, towing is authorised;

(vi) the conditions to be observed whilst towing.

(4) Each driver of a tow truck that is the subject of a written authorisation under subregulation (3)(b) must comply with each condition set out in the authorisation.

Penalty:

(a) for a first offence, a fine of 2 PU;

(b) for a second or subsequent offence, a fine of 4 PU.

(5) Each driver of a tow truck that is the subject of a written authorisation under subregulation (3)(b) must ensure that the authorisation is kept in the tow truck.

Penalty:

(a) for a first offence, a fine of 2 PU;

(b) for a second or subsequent offence, a fine of 4 PU.

(6) Each driver of a tow truck that is the subject of a written authorisation under subregulation (3)(b) must produce the authorisation to a police officer if required by that officer to do so.

Penalty for an offence under this subregulation:

(a) for a first offence, a fine of 2 PU;

(b) for a second or subsequent offence, a fine of 4 PU.

[Regulation 418 amended: SL 2022/174 r. 14.]

*[**419-420.** Deleted: SL 2025/4 r. 5.]*

421. Extent of authorisation

An authority obtained by a driver of a tow truck under regulation 418 to tow an articulated vehicle —

(a) does not commit a police officer to any personal liability, cost or charge;

(b) is evidence only of the giving of an authority for the towing of the vehicle and not for any other purpose.

[Regulation 421 amended: SL 2025/4 r. 6.]

*[**422.** Deleted: SL 2025/4 r. 7.]*

Part 13 — Towed agricultural implements

Division 1 — Preliminary

423. Terms used

(1) In this Part, unless the contrary intention appears —

on a road includes partly on a road but does not include on a road when an agricultural implement is being towed from gate to gate in accordance with regulation 425;

tow includes haul;

towed vehicle means a vehicle that is being towed by a towing vehicle;

towing vehicle means a motor vehicle that is towing an agricultural implement or 2 or more vehicles that include an agricultural implement;

used, in relation to a vehicle or a combination, includes being driven, or towed, and being left stationary.

(2) Nothing in this Part affects the application of these regulations or any other written law to a towing vehicle, a pilot vehicle or an escort vehicle.

(3) When there is an inconsistency between a provision of this Part and any other provision of these regulations, the provision in this Part prevails to the extent of that inconsistency.

424. Compliance with standards and requirements

A person must not drive a towing vehicle on a road unless the towing vehicle and the towed vehicle comply with each regulation in this Part that applies to the towing vehicle or the towed vehicle.

Penalty: a fine of 8 PU.

425. Gate to gate towing

(1) In this regulation —

gate to gate means 2 gates facing each other, one on each side of a road, where the distance between the 2 centrelines, drawn at right angles to the road, of each gate is 20 m or less.

(2) While an agricultural implement is being towed from gate to gate in accordance with this regulation the agricultural implement is not subject to any other regulation that would otherwise apply to it under a road law.

(3) Despite any other provision in this Part, a person may tow an agricultural implement or an agricultural combination from gate to gate —

(a) if the Commissioner of Main Roads has given approval to cross, during the tow, any road that is the Commissioner's responsibility; and

(b) if the traffic management plan entitled "Traffic Management Requirements — Towed Agricultural Implements Crossings *Ref Number 07/2071 D07#103477*" has been approved by the Commissioner of Main Roads and published in the *Gazette*.

(4) A person is not towing an agricultural implement or an agricultural combination from gate to gate in accordance with this regulation if the towing is carried out in a manner contrary to the approved management plan.

(5) Approval under subregulation (3)(a) must be sought and obtained in writing.

(6) A person may tow an agricultural implement or an agricultural combination from gate to gate in accordance with this regulation during the daytime or at night.

Division 2 — Standards and requirements in respect of towing and towed agricultural implements

426. Lighting equipment generally

(1) In this regulation —

lighting equipment means lights, reflectors and ancillary equipment.

(2) If a towed vehicle is being towed on a road at night there must be fitted to the towed vehicle, and connected electrically to the towing vehicle, lighting equipment which complies with —

(a) if the towed vehicle is a trailer —

(i) Part 10 Division 8; or

(ii) this Division;

or

(b) if the towed vehicle is not a trailer — this Division.

(3) If the lighting equipment mentioned in subregulation (2) is fitted by means of a light board, that light board —

(a) must be securely installed; and

(b) may —

(i) be installed with straps; and

(ii) incorporate a wiring harness connected to a suitable connector on the towing vehicle.

427. Positioning of lights and reflectors

All lights and reflectors required by this Division —

(a) subject to paragraph (b), must be fitted not less than 400 mm and not more than 1.5 m above ground level; and

(b) if there is no suitable structure not more than 1.5 m above ground level to which those lights and reflectors

can be fitted, may be fitted higher than, but as near as possible to 1.5 m above ground level; and

(c) must be fitted symmetrically, to each side of the rear of the towed vehicle, and —

(i) wherever possible, horizontally and inwards in the sequence stop light, reflector, rear light and signalling light; or

(ii) if it is not possible to fit those lights and reflectors in accordance with subparagraph (i), be fitted vertically, in the sequence mentioned with the stop light on the top and the signalling light on the bottom;

and

(d) must have the outer edge of their reflective or illuminated area not more than 400 mm from each of the lateral extremities of the towed vehicle; and

(e) must diffuse or direct their emitted or reflected light so as not to cause glare adversely affecting the vision of a person.

428. Stop lights

(1) There must be fitted to each towed vehicle towed on a road 2 stop lights —

(a) each of which, when lighted, displays a red light clearly visible in sunlight at all distances up to 60 m to the rear of the towed vehicle; and

(b) each of which is lighted when the foot brake of the towing vehicle is applied.

(2) Subregulation (1) does not apply if the combination of which the towed vehicle is a part is fitted with a flashing amber light in accordance with regulation 433 and that light is operating whenever the combination is being moved on a road.

429. Reflectors

(1) If an agricultural implement is towed or left stationary on a road at night the driver of the towing vehicle or the person who left the implement stationary must ensure that the towed implement, or in the case of an agricultural combination consisting of more than one towed vehicle, the rear vehicle of that combination, is fitted with 2 reflectors —

(a) each of which, at night, emits a red reflection of the light projected on to that reflector by a headlight complying with Part 10 Division 8 Subdivision 2 so as to be visible clearly, at a distance of 100 m, to the driver of the vehicle from which that light is projected; and

(b) each of which consists of —

(i) a reflective tape with an area of not less than 25 sq cm and a width of not less than 25 mm; or

(ii) a reflecting lens of not less than 25 mm in diameter fitted to a rear light.

Penalty: a fine of 8 PU.

(2) In addition to the reflectors required under subregulation (1) there may be fitted to a towed vehicle a third reflector which —

(a) complies with the requirements of subregulation (1)(b); and

(b) occupies a central position between the signalling lights mentioned in regulation 431.

430. Rear lights

If an agricultural implement is towed on a road at night, there must be fitted to that implement, or, in the case of an agricultural combination consisting of more than one towed vehicle, the rear vehicle of that combination, 2 rear lights —

(a) each of which is of a power not exceeding 7 W; and

(b) each of which, when lighted, displays a red light clearly visible at night at all distances up to 200 m to the rear of the towed vehicle.

431. Signalling lights

If an agricultural implement is towed on a road at night, there must be fitted to that implement, or, in the case of an agricultural combination consisting of more than one towed vehicle, the rear vehicle of that combination, 2 signalling lights —

(a) each of which, when lighted, displays an amber light clearly visible in sunlight at all distances up to 60 m to the rear of the towed vehicle; and

(b) which are readily operated by the driver of the towing vehicle from the proper driving position; and

(c) the operation of which is indicated by means of a tell-tale indicator that is visible and audible to the driver of the towing vehicle; and

(d) the switching on of each of which is followed by the display of its light within a maximum period of one second and by the regular flashing of its light thereafter at a rate of not less than 60 times or more than 120 times, per minute; and

(e) each of which flashes in phase with its counterpart on the same side of the towing vehicle and is operated by the same control switch; and

(f) which are capable of operating as flashing warning lights.

432. Clearance lights

(1) In this regulation —

clearance light means a light which, when lighted, gives an indication of the width of the towed vehicle from the front and from the rear of that vehicle.

(2) If an agricultural implement with a width exceeding 2.5 m is towed on a road at night, a clearance light must be fitted to each side of that implement.

433. Flashing amber light

(1) For the purposes of this Division, a flashing amber light, when switched on —

(a) must not be a strobe light; and

(b) must emit a rotating, flashing, yellow (or another colour or colours approved by the CEO) coloured light; and

(c) must flash between 120 and 200 times a minute; and

(d) must be clearly visible at a distance of 500 m in all directions or be supplemented by one or more additional warning lights so that the light emanating from at least one of them is clearly visible at a distance of 500 m in any direction.

(2) For the purposes of this Division, a flashing amber light that is not a strobe light, when switched on, must have a power of at least 55W.

434. Safety of components and attachments

(1) Every component of a towed vehicle being towed on a road must be maintained in a condition that is unlikely to render the use of that towed vehicle unsafe.

(2) Any folded arm, mechanism or structure which —

(a) forms part of a towed vehicle; and

(b) is capable of moving so as to increase any of the dimensions of the towed vehicle,

must be prevented from moving in that manner by chains, pins or some other mechanical locking system.

(3) Any component or hopper, bin or other attachment of, or to, a towed vehicle which is capable of becoming loose or detached

from that towed vehicle must be secured to prevent it from becoming loose or detached.

435. Safety chains

(1) Each agricultural implement being towed on a road must be connected to the towing vehicle or, in the case of an agricultural combination consisting of more than one towed vehicle, to the vehicle in front of it, not only by a coupling but also by —

(a) safety chains that conform with and are fitted in accordance with subregulations (3) and (4); or

(b) a safe locking device that conforms with subregulation (2).

(2) The safe locking device mentioned in subregulation (1) must consist of a spring clip, split pin or similar device which is designed to mechanically capture the coupling to prevent the accidental disconnection of the coupling.

(3) Safety chains mentioned in subregulation (1) must —

(a) consist of 2 chains; and

(b) be capable of keeping the agricultural implement in tow in the event of the failure or accidental disconnection of the coupling between that implement and the towing vehicle or the vehicle in front of that implement, as the case requires; and

(c) be fitted to the frame or other substantial portion of the agricultural implement and to a substantial portion of the towing vehicle or the vehicle in front of that implement, as the case requires; and

(d) not be liable to accidental disconnection; and

(e) permit all normal angular movements of the coupling mentioned in paragraph (b) without unnecessary slack in the chains mentioned in paragraph (a).

(4) The chains mentioned in subregulation (3)(a) must —

(a) be as short as practicable; and

(b) be fitted in a crossed over position so as to prevent the forward end of the drawbar of the towed vehicle from striking the ground in the event of accidental disconnection of the coupling mentioned in subregulation (3)(b); and

(c) have their forward ends fitted to the towing vehicle or another towed vehicle, as the case requires, as close to the pivot of the coupling mentioned in subregulation (3)(b) as practicable; and

(d) each have links with the constituent metal thereof having a minimum diameter of 10 mm; and

(e) each be attached to each end by a ring or shackle which is made of steel with a minimum diameter of 10 mm.

436. Portable warning signs

All agricultural combinations must carry and use portable warning signs in accordance with the *Road Traffic Code 2000* regulation 191 as though ***heavy vehicle*** in that regulation included an agricultural combination.

437. Towed mass ratios

The mass of a towed vehicle being towed on a road by a towing vehicle other than an agricultural machine must not exceed twice the unloaded mass of the towing vehicle.

438. Lighting for night towing

(1) An agricultural combination must not be used on a road at night if it exceeds 3.5 m in width or 25 m in length.

(2) An agricultural combination, other than a combination mentioned in subregulation (1), may be used on a road at night if it —

(a) is fitted with a flashing amber light in accordance with regulation 433 and that light is operating whenever the combination is being moved on a road; and

(b) complies with regulations 429, 430, 431 and 432.

439. Brakes

(1) An agricultural combination being used on a road must be capable of stopping from whichever of these speeds that is the lower speed, within a distance not exceeding 15 m —

(a) a speed of 30 km/h; or

(b) the maximum speed of which it is capable.

(2) Any braking system on a towed vehicle which is capable of being connected to the towing vehicle must be connected to that vehicle while it and the towed vehicle are in motion on a road.

440. Headlights

An agricultural vehicle, or the front vehicle in an agricultural combination, must have its low-beam headlights on while travelling in the daytime, unless it is not required under these regulations to have headlights.

441. Mirrors

Unless a flashing amber light is fitted to an agricultural combination in accordance with regulation 433 and is operated whenever the combination is being moved on a road a towing vehicle must be equipped with mirrors which enable the driver to see vehicles approaching from the rear.

442. Warning flags

An agricultural combination that exceeds 2.5 m in width must not be used on a road unless warning flags, made of high

visibility yellow or orange material and of at least 450 mm square in size are attached to each lateral extremity of the combination.

443. Certain vehicles may be equipped with flashing amber light

If a towing vehicle, a pilot vehicle or an escort vehicle is fitted with a flashing amber light in accordance with regulation 433 the light is not to be operated unless —

(a) the towing vehicle is towing, on a road —

(i) a towed vehicle at night; or

(ii) a towed vehicle exceeding 2.5 m in width and 25 m in length; or

(iii) a towed vehicle the shape and dimensions of which obscure the driver's rearward view;

or

(b) the pilot motor vehicle is piloting an agricultural combination which is being used on a road; or

(c) the escort motor vehicle is escorting an agricultural combination which is being used on a road.

444. Warning signs for oversize agricultural combinations

(1) An agricultural combination which exceeds 3.5 m in width or 25 m in length must not be used on a road unless —

(a) warning signs displaying the word "OVERSIZE" are affixed to the front of the towing vehicle and the rear of the towed vehicle or, in the case of a combination consisting of more than one towed vehicle, the rear towed vehicle; and

(b) it is preceded, at a distance of not more than 500 m or less than 300 m, by a pilot vehicle and followed, at a distance of not more than 300 m or less than 200 m, by a pilot vehicle.

(2) Warning signs mentioned in subregulation (1) and warning signs on pilot vehicles must —

(a) subject to subregulation (3), be made of a rigid material; and

(b) have in black lettering on a yellow reflective background in upper case and at least —

(i) 200 mm high with a brush stroke at least 28 mm wide for the word “OVERSIZE”; and

(ii) 100 mm high with a brush stroke at least 15 mm wide for the words “LOAD AHEAD”;

and

(c) be of these dimensions —

(i) 1 200 mm long and 450 mm wide in the case of a single line of lettering;

(ii) 1 200 mm long and 600 mm wide in the case of a double line of lettering.

(3) If a rigid sign cannot adequately be mounted on the rear of a towed vehicle a flexible sign, not being made of paper or cloth, which otherwise complies with subregulation (2) may be used on that vehicle.

(4) A pilot vehicle may carry a load or tow a trailer or an agricultural implement as long as the vehicle, together with its load, if any —

(a) has a loaded mass that does not exceed 4.5 t; and

(b) together with the trailer or implement, if any, does not exceed 25 m in length or 2.5 m in width.

(5) Despite subregulation (1)(b), a pilot vehicle to the rear of the combination is not required for a combination which exceeds 3.5 m in width or 25 m in length if the combination is fitted with a flashing amber light in accordance with regulation 433 and that light is operating whenever the combination is being moved on a road.

445. Communication devices

(1) An oversize agricultural combination and any accompanying pilot vehicle or escort vehicle must each have an electronic device that allows the drivers to communicate effectively with each other.

(2) Subregulation (1) does not apply if —

(a) the combination includes an oversize agricultural machine; or

(b) the escort vehicle (if there is one) is a police vehicle.

446. Vehicles other than agricultural implements

(1) A vehicle, other than an agricultural implement, that —

(a) is a heavy vehicle; or

(b) exceeds 2.5 m in width,

must not be towed in an agricultural combination.

(2) Subject to subregulation (3), if a motor vehicle or pig trailer is being towed in an agricultural combination, the motor vehicle or pig trailer must be the rearmost vehicle in the agricultural combination.

(3) A motor vehicle or pig trailer must not be towed in an agricultural combination if the towing apparatus of another vehicle in the agricultural combination does not have the towing capacity to tow the motor vehicle or pig trailer.

(4) A vehicle, other than an agricultural implement, that is being towed in an agricultural combination must be attached to the vehicle in front of it by —

(a) a coupling which complies with these regulations; or

(b) if the towed vehicle is a motor vehicle — a towing apparatus of a kind approved by the CEO.

Division 3 — Other obligations in relation to towing and towed agricultural implements

447. Speed restrictions

(1) Subject to subregulation (2), an agricultural combination must not travel at a speed exceeding 20 km/h below the local speed limit or, where the local speed limit is 80 km/h or more, 80 km/h.

(2) If a motor vehicle is being towed in an agricultural combination, the agricultural combination must not travel at a speed exceeding 20 km/h below the local speed limit or, where the local speed limit is 70 km/h or more, 50 km/h.

448. Movements of agricultural combinations in metropolitan region, during peak hours, on freeways

(1) An agricultural combination with a width not exceeding 2.5 m and a length not exceeding 25 m must not be used on a road within the metropolitan region during peak hours.

(2) An agricultural combination with a width exceeding 2.5 m or a length exceeding 25 m must not be used on a road within the metropolitan region without the approval of the Commissioner of Main Roads.

(3) An agricultural combination must not be used on a road or portion of a road that is designated as a freeway by signs erected on or adjacent to the road on a freeway.

449. Parking of agricultural combinations on a carriageway

(1) In this regulation —

built-up area means the territory contiguous to and including any road —

(a) on which there is provision for lighting by means of street lights; or

(b) which is built-up with structures devoted to business, industry or dwelling houses at intervals of less than 500 m; or

(c) beyond a sign indicating "BUILT-UP AREA" erected at the roadside to face drivers approaching a development consisting of dwelling houses, business or industrial structures.

(2) An agricultural combination, or any component of an agricultural combination, that exceeds 2.5 m in width must not be parked on a carriageway —

(a) in a built-up area; or

(b) outside a built-up area, except in a truck bay or other area set aside for the parking of vehicles.

450. Convoys

(1) No more than 2 agricultural combinations may be moved in a convoy.

(2) Regulation 444(1)(b) does not apply to an agricultural combination if the combination is moved in a convoy with another agricultural combination as long as the convoy is preceded by a pilot vehicle and followed by a pilot vehicle each of which is fitted with an amber flashing light in accordance with regulation 433 which is operating whenever the convoy is being moved on a road.

451. Limit on number of towed vehicles

(1) The maximum number of agricultural implements that may be towed in an agricultural combination is —

(a) if no other vehicles are being towed in the agricultural combination — 3 agricultural implements; or

(b) if one other vehicle is being towed in the agricultural combination — 2 agricultural implements.

(2) Only one vehicle that is not an agricultural implement may be towed in an agricultural combination.

452. Permission for movement of excessively high agricultural combinations

(1) If an agricultural combination exceeds 4.3 m in height or may come into contact with an electricity supply line while being used on a road it must not be used on that road unless written permission has been obtained from each relevant body established by the *Electricity Corporations Act 2005* section 4(1).

(2) A written permission may be made subject to compliance with specified requirements including a requirement that the combination be escorted by a police officer while being used.

(3) A written permission has effect for 12 months from the day it is obtained.

453. Permits for movement of excessively wide or long agricultural combinations

(1) If an agricultural combination exceeds 7.5 m in width or 30 m in length it must not be used on a road unless a permit issued under this regulation is in effect in relation to the combination and there is compliance with each condition imposed on the permit.

(2) A permit issued under this regulation must be in a form approved by the Commissioner of Police and may be issued by —

(a) a police officer; or

(b) a person employed under the *Public Sector Management Act 1994* by the Commissioner of Police in the Police Service and authorised for that purpose (***Police Service employee***).

(3) On an application for a permit a police officer or Police Service employee must issue the permit unless that person is of the

opinion that the use of the combination on a road forming the whole or any part of the route to be followed by that combination would endanger safety.

(4) A permit may be subject to specified conditions that the person issuing the permit considers necessary to ensure the combination is moved safely, including —

(a) any speed limit to be observed while moving the combination; and

(b) the route to be followed by the combination; and

(c) the times during which the combination may be used on a road; and

(d) whether the combination must be accompanied by a police escort when being used on a road.

(5) A permit has effect for 12 months from the day it issued.

454. Permits in relation to movements of agricultural combinations

(1) If the CEO is satisfied that it is appropriate to do so in respect of a proposed movement of an agricultural combination, the CEO may issue a permit that authorises the combination to be moved on a road in a way that would not be in accordance with a regulation in Division 2 specified in the permit other than regulation 434 or 435.

(2) A permit must be in a form approved by the CEO.

(3) A permit is subject to —

(a) the condition that it must be carried by the driver of the towing vehicle while the combination is being moved under the authority of the permit; and

(b) any conditions that the CEO considers necessary to ensure the combination is moved safely that are specified in the permit.

(4) Without limiting subregulation (3)(b), the conditions that may be specified under that paragraph include —

(a) any speed limit to be observed by the person driving the towing vehicle; and

(b) the route to be followed by the combination; and

(c) the times during which the combination may be moved on a road; and

(d) whether the combination must be accompanied by a police escort when being moved on a road.

(5) If a condition to which a permit issued under this regulation is subject is not complied with, the permit ceases to have effect.

(6) A permit issued under this regulation may be obtained without payment of a fee and is valid for the period specified in the permit.

Part 13A — Pilot vehicles

[Heading inserted: Gazette 15 Nov 2016 p. 5063.]

Division 1 — Preliminary

[Heading inserted: Gazette 15 Nov 2016 p. 5063.]

454A. Terms used

In this Part —

approved means approved by the Commissioner of Main Roads;

driver's licence does not include a provisional licence;

heavy vehicle pilot licence means a licence granted under Division 2;

medical practitioner means a person registered under the *Health Practitioner Regulation National Law (Western Australia)* in the medical profession;

provisional licence has the meaning given in the *Road Traffic (Authorisation to Drive) Act 2008* section 3(1);

renewal application means an application made under regulation 454O for the renewal of a heavy vehicle pilot licence.

[Regulation 454A inserted: Gazette 15 Nov 2016 p. 5063-4; amended: Gazette 1 Dec 2017 p. 5739.]

454B. Pilot vehicle must be driven by holder of heavy vehicle pilot licence or authorised person

(1) A person must not use a pilot vehicle for the purpose of facilitating the movement of an oversize or over-mass vehicle unless —

(a) the person is the holder of a heavy vehicle pilot licence; or

(b) the person is authorised to use the pilot vehicle by a notice given under subregulation (2).

Penalty for this subregulation:

(a) for a first offence, a fine of 24 PU;

(b) for a subsequent offence, a fine of 32 PU.

Modified penalty: 4 PU.

(2) The Commissioner of Main Roads may, by notice published in the *Gazette*, authorise a person or a class of person to use a pilot vehicle for the purpose of facilitating the movement of a class of oversize or over-mass vehicle specified in the notice in circumstances specified in the notice.

(3) The Commissioner of Main Roads must not publish a notice under subregulation (2) unless the Commissioner is satisfied that —

(a) the use of the pilot vehicle will be for the purpose of facilitating the movement of the oversize or over-mass vehicle for an agricultural or primary production application; and

(b) use of the pilot vehicle in accordance with the notice would not result in an unreasonable danger to road users.

[Regulation 454B inserted: Gazette 15 Nov 2016 p. 5064.]

Division 2 — Licensing of pilots

[Heading inserted: Gazette 15 Nov 2016 p. 5065.]

Subdivision 1 — General matters

[Heading inserted: Gazette 15 Nov 2016 p. 5065.]

454C. Applying for a heavy vehicle pilot licence

(1) A person may apply to the Commissioner of Main Roads for a heavy vehicle pilot licence.

(2) An application for a heavy vehicle pilot licence must be —

(a) in an approved form; and

(b) accompanied by any document that is required by the approved form; and

(c) accompanied by the medical evidence required by regulation 454D; and

(d) accompanied by the competency evidence required by regulation 454E(2); and

(e) accompanied by a copy of the applicant's driver's licence; and

(f) accompanied by a fee of $205.

[Regulation 454C inserted: Gazette 15 Nov 2016 p. 5065.]

454D. Medical evidence

The medical evidence for the purposes of an application for a heavy vehicle pilot licence, or a renewal application, is a report made by a medical practitioner certifying that the medical practitioner —

(a) examined the applicant on a day specified in the report, which is a day within 6 months, or within a longer approved period, before the day the application is made; and

(b) on that examination, passed the applicant in accordance with the set of medical standards described as the commercial standards in *Assessing Fitness to Drive for commercial and private vehicle drivers*, Fifth Edition 2016, published by Austroads Ltd (ISBN 978-1-925451-10-8).

[Regulation 454D inserted: Gazette 15 Nov 2016 p. 5065.]

454E. Competency evidence

(1) In this regulation —

Certificate of Attendance means a certificate issued by a registered training provider stating that a person has attended a training course provided by the registered training provider;

registered training provider means —

(a) a training organisation registered by the Training Accreditation Council as a training provider under the *Vocational Education and Training Act 1996* section 58B(a); or

(b) a training organisation registered by the National VET Regulator as a registered training organisation under the *National Vocational Education and Training Regulator Act 2011* (Commonwealth);

Statement of Attainment means a statement issued by a registered training provider stating that a person has successfully completed training provided by the registered training provider.

(2) The competency evidence for the purposes of an application for a heavy vehicle pilot licence is a Statement of Attainment issued by a registered training provider to a person stating that the person has, within the period of 12 months before making the application, successfully completed training that includes —

(a) a training course in the pilotage of oversize and over-mass vehicles accredited by —

(i) the Training Accreditation Council under the *Vocational Education and Training Act 1996* section 58C(a); or

(ii) the National VET Regulator under the *National Vocational Education and Training Regulator Act 2011* (Commonwealth);

and

(b) an approved training course on bridge supervision.

(3) The competency evidence for the purposes of a renewal application is a Certificate of Attendance issued by a registered training provider to a person stating that the person has, within the period of 12 months before making the application, attended a refresher training course in the pilotage of oversize and over-mass vehicles that is an approved training course.

[Regulation 454E inserted: Gazette 15 Nov 2016 p. 5065-6.]

454F. Powers for dealing with applications for heavy vehicle pilot licence

(1) For the purposes of deciding an application for a heavy vehicle pilot licence, the Commissioner of Main Roads may request the applicant to give the Commissioner any of the following —

(a) any information that is reasonably necessary in order to decide the application;

(b) a report by either or both of the following —

(i) a medical practitioner about the person's physical health and fitness to engage safely in the activities that would be authorised by the licence;

(ii) a person registered under the *Health Practitioner Regulation National Law (Western Australia)* in the psychology profession about the person's mental health and fitness to engage safely in the activities that would be authorised by the licence.

(2) On an application for a heavy vehicle pilot licence, the Commissioner of Main Roads may request the applicant to demonstrate that the applicant is competent to engage safely in the activities that would be authorised by the licence.

(3) An applicant who does not comply with a request made under subregulation (1) or (2) within 21 days after the date on which the request is made, or any longer period permitted by the

Commissioner of Main Roads, is to be taken to have withdrawn the application.

(4) The Commissioner of Main Roads may require an applicant to verify by means of statutory declaration any information provided in response to a request made under subregulation (1) or (2).

[Regulation 454F inserted: Gazette 15 Nov 2016 p. 5066-7.]

454G. Deciding applications for heavy vehicle pilot licence

(1) On an application for a heavy vehicle pilot licence, the Commissioner of Main Roads may refuse the application or grant the heavy vehicle pilot licence.

(2) However, the Commissioner of Main Roads must not grant a heavy vehicle pilot licence unless satisfied as to each of these matters —

(a) that the application complies with regulation 454C(2);

(b) that the applicant is physically and mentally fit to engage safely in the activities that would be authorised by the licence;

(c) that the applicant is competent to engage safely in the activities that would be authorised by the licence;

(d) that the applicant holds a driver's licence;

(e) that, on the grant of the heavy vehicle pilot licence, the applicant would be a person, or in a class of persons, declared by the Commissioner of Police under the *Road Traffic Code 2000* regulation 271 to be an authorised person for the purpose of facilitating the movement of an oversize or over-mass vehicle.

[Regulation 454G inserted: Gazette 15 Nov 2016 p. 5067-8.]

454H. Conditions of heavy vehicle pilot licence

(1) A heavy vehicle pilot licence is subject to the following conditions —

(a) the holder must not use a pilot vehicle for the purpose of facilitating the movement of an oversize or over-mass vehicle during any period when the holder is not —

(i) the holder of a driver's licence; or

(ii) an authorised person of a kind mentioned in regulation 454G(2)(e);

(b) that the holder of the licence must, while using a pilot vehicle for the purpose of facilitating the movement of an oversize or over-mass vehicle, carry their driver's licence;

(c) that the holder of the licence must operate in accordance with the "Heavy Vehicle Pilot Licence Code of Conduct" prepared by, and published on the website of, Main Roads Western Australia, as amended from time to time.

Note for this subregulation:

The website address of Main Roads Western Australia is <http://www.mainroads.wa.gov.au>

(2) A heavy vehicle pilot licence may be subject to any other conditions decided by the Commissioner of Main Roads and specified in the licence.

(3) Conditions that may be imposed include —

(a) a condition that limits the time, place or circumstances in which an activity authorised by the licence may be conducted;

(b) any condition that is reasonably necessary to ensure, so far as is practicable, that any activity that is authorised by the licence is conducted safely.

[Regulation 454H inserted: Gazette 15 Nov 2016 p. 5068.]

454I. Duration of heavy vehicle pilot licence

(1) A heavy vehicle pilot licence has effect on and from the date it is granted for the period specified in it, being 3 years or less.

(2) Subregulation (1) applies unless the licence is cancelled in that period.

[Regulation 454I inserted: Gazette 15 Nov 2016 p. 5068.]

454J. Form of heavy vehicle pilot licence

(1) The Commissioner of Main Roads must issue a licence document to the holder of a heavy vehicle pilot licence.

(2) The document must be in writing in an approved form.

[Regulation 454J inserted: Gazette 15 Nov 2016 p. 5069.]

454K. Heavy vehicle pilot licence not transferable

A heavy vehicle pilot licence is not transferable.

[Regulation 454K inserted: Gazette 15 Nov 2016 p. 5069.]

454L. Heavy vehicle pilot licence may be surrendered

(1) A heavy vehicle pilot licence holder may surrender the licence by giving it to the Commissioner of Main Roads with written notice that it is being surrendered.

(2) On receipt of the written notice, the Commissioner of Main Roads must cancel the licence.

[Regulation 454L inserted: Gazette 15 Nov 2016 p. 5069.]

454M. Lost heavy vehicle pilot licence may be replaced

(1) If the Commissioner of Main Roads is satisfied that a heavy vehicle pilot licence has been destroyed, lost or stolen, the Commissioner may issue a replacement.

(2) A fee of $14.90 is payable for issuing a replacement under subregulation (1).

[Regulation 454M inserted: Gazette 15 Nov 2016 p. 5069.]

454N. Amending heavy vehicle pilot licence

(1) In this regulation —

amend, a heavy vehicle pilot licence, includes to amend, impose and remove a condition of the licence.

(2) A heavy vehicle pilot licence holder may apply to the Commissioner of Main Roads to amend the licence.

(3) The application must be —

(a) in an approved form; and

(b) accompanied by any document that is required by the approved form; and

(c) accompanied by a fee of $14.90.

(4) The Commissioner of Main Roads may refuse the application, or grant it and amend the licence.

(5) If, while a heavy vehicle pilot licence has effect, the Commissioner of Main Roads wants to amend it in any material way, the Commissioner must —

(a) give the holder written notice of the proposal and reasons for it; and

(b) except where the removal of a condition is proposed, give the holder a reasonable opportunity to make submissions about the proposal; and

(c) consider any submissions and then decide whether to amend the licence; and

(d) give the holder written notice of the decision.

(6) Subregulation (5) does not apply to an amendment to a licence that is in accordance with an application by the licence holder.

(7) Regulations 454F and 454G, with any necessary changes, apply in relation to dealing with an application to amend a heavy vehicle pilot licence as if it were an application for a heavy vehicle pilot licence.

(8) Regulations 454H and 454I, with any necessary changes, apply in relation to amending a heavy vehicle pilot licence in the same way as they apply to the granting of a heavy vehicle pilot licence.

(9) A decision by the Commissioner of Main Roads to amend a heavy vehicle pilot licence has effect on the date specified in the notice.

[Regulation 454N inserted: Gazette 15 Nov 2016 p. 5069-70.]

454O. Renewing heavy vehicle pilot licence

(1) In this regulation —

expiry day, in relation to a heavy vehicle pilot licence means the last day of the period for which the licence is in effect.

(2) The holder of a heavy vehicle pilot licence may, within 6 months before the expiry day, apply to the Commissioner of Main Roads for a renewal of the licence.

(3) The application must be —

(a) in an approved form; and

(b) accompanied by any document that is required by the approved form; and

(c) accompanied by the medical evidence referred to in regulation 454D; and

(d) accompanied by the competency evidence referred to in regulation 454E(3); and

(e) accompanied by a copy of the applicant's driver's licence; and

(f) accompanied by a fee of $205.

(4) Regulations 454F and 454G, with any necessary changes, apply in relation to dealing with a renewal application as if it were an application for a heavy vehicle pilot licence.

(5) Regulations 454H and 454I, with any necessary changes, apply in relation to renewing a heavy vehicle pilot licence in the same way as they apply to granting a heavy vehicle pilot licence.

[Regulation 454O inserted: Gazette 15 Nov 2016 p. 5070-1.]

Subdivision 2 — Suspending and cancelling heavy vehicle pilot licence

[Heading inserted: Gazette 15 Nov 2016 p. 5071.]

454P. Grounds for suspending or cancelling

For the purposes of this Subdivision, the following are grounds to suspend or cancel a heavy vehicle pilot licence —

[(a) deleted]

(b) the holder —

(i) has not complied with the licence; or

[(ii) deleted]

(iii) has obtained the licence because of false or misleading information; or

(iv) is not physically or mentally fit to engage safely in the activities that are authorised by the licence; or

(v) is not competent to engage safely in the activities that are authorised by the licence; or

(vi) is not qualified under these regulations to hold the licence;

(c) the holder is convicted of —

(i) an offence against a road law; or

(ii) an offence against a law of another place that substantially corresponds to an offence against a road law.

[Regulation 454P inserted: Gazette 15 Nov 2016 p. 5071; amended: Gazette 1 Dec 2017 p. 5739.]

454Q. Procedure for suspending or cancelling heavy vehicle pilot licence

(1) This regulation applies if the Commissioner of Main Roads is satisfied that there are grounds to suspend or cancel a heavy vehicle pilot licence and proposes to suspend or cancel it (the ***proposed action***).

(2) The Commissioner of Main Roads must give the heavy vehicle pilot licence holder a written notice that states —

(a) the proposed action; and

(b) any period of suspension proposed by the Commissioner (either as a period of time or by reference to a future event); and

(c) the grounds and the evidence in support of the grounds; and

(d) that the holder is entitled to give the Commissioner written submissions about the proposed action; and

(e) the date (the ***submission date***), being at least 28 days after the date on which the notice is given to the holder, by which any submission must be received.

(3) Having considered any submissions received from the holder before the submission date, the Commissioner may, if the Commissioner considers there are grounds to do so —

(a) suspend the heavy vehicle pilot licence for a period that is no longer than the period of suspension specified in the notice; or

(b) cancel the heavy vehicle pilot licence in accordance with the proposed action specified in the notice.

(4) The suspension or cancellation of the heavy vehicle pilot licence has effect when the holder is given notice of the suspension or cancellation under subregulation (3) or on a later date specified in the notice.

[Regulation 454Q inserted: Gazette 15 Nov 2016 p. 5071-2.]

454R. Suspension in urgent circumstances

(1) Despite regulation 454Q, the Commissioner of Main Roads may suspend a heavy vehicle pilot licence for a period of up to 28 days by giving the holder of the licence a written notice of the suspension and the suspension period (stated either as a period of time or by reference to a future event).

(2) The Commissioner may take action under subregulation (1) only if the Commissioner is satisfied that —

(a) there are grounds to suspend or cancel the licence; and

(b) if the procedure in regulation 454Q were followed, an unacceptable risk in relation to people or property would exist during the time it is followed.

(3) The notice must be accompanied by written reasons for the decision to suspend the licence.

(4) The suspension of the heavy vehicle pilot licence has effect when the holder is given the notice or on any later date specified in the notice.

(5) This regulation does not prevent the Commissioner of Main Roads from also taking action under regulation 454Q to suspend or cancel a heavy vehicle pilot licence.

[Regulation 454R inserted: Gazette 15 Nov 2016 p. 5072.]

454S. Heavy vehicle pilot licence to be returned if cancelled or suspended

If the Commissioner of Main Roads suspends or cancels a heavy vehicle pilot licence, the holder must return the licence

document to the Commissioner within 14 days after the date of receiving notice of the suspension or cancellation.

Penalty:

(a) for a first offence, a fine of 4 PU;

(b) for a subsequent offence, a fine of 8 PU.

Modified penalty: 2 PU.

[Regulation 454S inserted: Gazette 15 Nov 2016 p. 5073.]

454T. Suspension may be lifted

The Commissioner of Main Roads may lift the suspension of a heavy vehicle pilot licence at any time by written notice given to the holder.

[Regulation 454T inserted: Gazette 15 Nov 2016 p. 5073.]

Subdivision 3 — Duties of heavy vehicle pilot licence holder

[Heading inserted: Gazette 15 Nov 2016 p. 5073.]

454U. Duty to correct wrong information

(1) This regulation applies if the holder of a heavy vehicle pilot licence becomes aware that information given by the holder to the Commissioner of Main Roads in, or in relation to, an application made under regulation 454C, 454N or 454O is, or has become, incorrect in a material respect.

(2) Within 14 days after becoming aware of the matter, the holder must inform the Commissioner of Main Roads about the matter and give the correct information to the Commissioner.

Penalty for this subregulation:

(a) for a first offence, a fine of 4 PU;

(b) for a subsequent offence, a fine of 8 PU.

Modified penalty: 2 PU.

[Regulation 454U inserted: Gazette 15 Nov 2016 p. 5073.]

454V. Duty to notify Commissioner of Main Roads if no longer authorised to drive

If a person who is the holder of a heavy vehicle pilot licence ceases to be authorised to drive a motor vehicle on roads, the person must give the Commissioner of Main Roads written notice of the fact as soon as practicable.

Penalty:

(a) for a first offence, a fine of 4 PU;

(b) for a subsequent offence, a fine of 8 PU.

Modified penalty: 2 PU.

[Regulation 454V inserted: Gazette 15 Nov 2016 p. 5073.]

454W. Duty to notify Commissioner of Main Roads of medical impairment

(1) In this regulation —

medical impairment, in relation to a person who is the holder of a heavy vehicle pilot licence, means any permanent or long-term mental or physical condition (which may include a dependence on drugs or alcohol) if —

(a) the condition is likely to impair the ability of the person to safely engage in activities authorised by the licence; or

(b) the treatment for the condition is likely to impair the ability of the person to safely engage in activities authorised by the licence.

(2) If a person who is the holder of a heavy vehicle pilot licence becomes medically impaired, the person must give the Commissioner of Main Roads written notice of the fact as soon as practicable.

Penalty for this subregulation:

(a) for a first offence, a fine of 4 PU;

(b) for a subsequent offence, a fine of 8 PU.

Modified penalty: 2 PU.

[Regulation 454W inserted: Gazette 15 Nov 2016 p. 5074.]

454X. Licence to be carried and produced on request

The holder of a heavy vehicle pilot licence must —

(a) while driving a pilot vehicle on a road, carry the licence document; and

(b) produce that document if directed to do so by a police officer.

Penalty:

(a) for a first offence, a fine of 24 PU;

(b) for a subsequent offence, a fine of 32 PU.

Modified penalty: 4 PU.

[Regulation 454X inserted: Gazette 15 Nov 2016 p. 5074.]

454Y. Facilitating movement of oversize or over-mass vehicle in accordance with order or permit

The holder of a heavy vehicle pilot licence must not use a pilot vehicle to facilitate the movement of an oversize or over-mass vehicle unless a mass or dimension requirement that applies to the vehicle or its load has been modified by —

(a) an order as defined in section 32 of the Act; or

(b) a permit as defined in section 32 of the Act.

Penalty:

(a) for a first offence, a fine of 24 PU;

(b) for a subsequent offence, a fine of 32 PU.

Modified penalty: 4 PU.

[Regulation 454Y inserted: Gazette 15 Nov 2016 p. 5074-5.]

454Z. Contravening condition of heavy vehicle pilot licence

The holder of a heavy vehicle pilot licence must not contravene a condition of the licence.

Penalty:

(a) for a first offence, a fine of 24 PU;

(b) for a subsequent offence, a fine of 32 PU.

Modified penalty: 4 PU.

[Regulation 454Z inserted: Gazette 15 Nov 2016 p. 5075.]

Subdivision 4 — Miscellaneous matters

[Heading inserted: Gazette 15 Nov 2016 p. 5075.]

454ZA. Register of heavy vehicle pilot licences

(1) The Commissioner of Main Roads must keep a register in an approved form of all heavy vehicle pilot licences.

(2) The register must record, in relation to each heavy vehicle pilot licence, the following information —

(a) the name of the holder of the licence;

(b) the date on which the licence was granted;

(c) if the licence was renewed — the date of the renewal;

(d) if the licence was suspended — the date of the suspension;

(e) if the licence was cancelled — the date of the cancellation.

(3) The register may record any other information relevant to a heavy vehicle pilot licence holder or to the grant, amendment, renewal, suspension or cancellation of a heavy vehicle pilot licence that the Commissioner of Main Roads thinks fit.

(4) The Commissioner of Main Roads must ensure the information in the register is up-to-date.

[Regulation 454ZA inserted: Gazette 15 Nov 2016 p. 5075.]

454ZB. Notification and reconsideration of decisions under this Part

Part 15 provides for the notification and reconsideration of certain decisions made under this Part.

[Regulation 454ZB inserted: Gazette 15 Nov 2016 p. 5075.]

454ZC. Transitional arrangements for accredited pilots

(1) In this regulation —

commencement day means the day on which the *Road Traffic Regulations Amendment (Pilot Vehicle Drivers) Regulations 2016* regulation 5 comes into operation;

transitional pilot means a person who, immediately before commencement day, was an accredited pilot as defined in the *Road Traffic Code 2000* regulation 3(1).

(2) Unless subregulation (3) applies, a person who is a transitional pilot does not commit an offence under regulation 454B(1) if the person uses a pilot vehicle for the purpose of facilitating the movement of an oversize or over-mass vehicle in the period starting on commencement day and ending on the day that is 12 months after that day.

(3) For the purposes of an application for a heavy vehicle pilot licence made by a transitional pilot in the period starting on commencement day and ending on the day that is 3 years after that day, the requirement referred to in regulation 454C(2)(d) is satisfied if the application is accompanied by —

(a) evidence that the applicant is a transitional pilot; and

(b) evidence of the applicant's experience in piloting oversize or over-mass vehicles in the period of 3 years before the application is made.

[Regulation 454ZC inserted: Gazette 15 Nov 2016 p. 5076.]

Part 14 — Minister's declarations and CEO's exemptions

Division 1 — Preliminary

455. Terms used

In this Part —

application means an application for —

(a) the making, variation or revocation of a declaration; or

(b) the grant, variation or cancellation of a CEO exemption,

as is relevant to the case;

CEO exemption means an exemption granted by the CEO under regulation 462(1);

declaration means a declaration of the Minister under regulation 457(1);

specified means specified in a CEO exemption or a declaration, as is relevant to the case.

Division 2 — Minister's declarations

456. Instigating action as to Ministerial declarations

(1) A declaration may be given on the volition of the Minister or on an application.

(2) A declaration may be varied or revoked on the volition of the Minister or on the application of a person to whom the declaration applies or a person who has sufficient interest in the vehicle to which the declaration applies.

457. Minister's declarations that specified regulations do not apply to specified persons or vehicles (s. 138)

(1) The Minister may declare, in writing, that a specified provision of these regulations does not apply to any of these —

(a) a specified person;

(b) all persons of a specified kind;

(c) a specified vehicle;

(d) all vehicles of a specified kind.

(2) The Minister may make a declaration only if satisfied that —

(a) compliance with the provision would prevent the vehicle from operating in the way in which, or for the purpose for which, the vehicle was built or modified; or

(b) the vehicle is an experimental vehicle, a prototype, or another vehicle, that could not reasonably be expected to comply with the provision; or

(c) before the provision commenced —

(i) the vehicle was licensed, or otherwise authorised, by the CEO or a corresponding authority, to be driven or towed on a road; and

(ii) was not required to comply with a similar provision before that commencement.

(3) When deciding whether to make a declaration, the Minister must take into account the likelihood and significance of any adverse effect on safety or the environment if the declaration were made.

458. Variation of a declaration

(1) The Minister may vary a declaration only if satisfied that —

(a) since the declaration was made, a change has happened in relation to something the Minister considered in deciding to make the declaration; and

(b) the declaration would have been made as it is proposed to be varied if the change had happened before the declaration was made.

(2) In deciding whether to vary a declaration, the Minister must take into account the likelihood and significance of any adverse effect on safety or the environment if the variation were made.

459. Revocation of declaration

The Minister may revoke a declaration only if —

(a) since the declaration was made, a change has happened in relation to something the Minister considered in deciding to make the declaration; and

(b) the declaration would not have been made if the change had happened before the declaration was made.

Division 3 — CEO's exemptions from regulations about standards or other requirements in respect of vehicles

460. Term used: vehicle standard regulation

In this Division —

vehicle standard regulation —

(a) in relation to an agricultural implement, means a regulation in Part 13 Division 2 other than regulation 434 or 435;

(b) otherwise, means a regulation made under section 132(2)(b).

461. Instigating action as to CEO exemptions

(1) A CEO exemption may be granted on the volition of the CEO or on an application.

(2) A CEO exemption may be varied or cancelled —

(a) on the volition of the CEO —

(i) in urgent circumstances, under regulation 465; or

(ii) other than in urgent circumstances, under regulation 466;

or

(b) on the application of a person to whom the exemption applies or a person who has sufficient interest in the vehicle to which the exemption applies.

462. CEO's exemptions from specified provisions of vehicle standard regulations

(1) The CEO may grant an exemption from a specified provision of a vehicle standard regulation in respect of any of these —

(a) a specified person having an interest in a specified vehicle or vehicles of a specified kind;

(b) all persons having a specified interest in a specified vehicle or vehicles of a specified kind;

(c) a specified vehicle;

(d) all vehicles of a specified kind.

(2) The CEO may grant an exemption from a provision of a vehicle standard regulation in respect of a vehicle only if satisfied that —

(a) compliance with the provision would prevent the vehicle from operating in the way in which, or for the purpose for which, the vehicle was built or modified; or

(b) the vehicle is an experimental vehicle, a prototype, or another vehicle, that could not reasonably be expected to comply with the provision; or

(c) before the provision commenced —

(i) the vehicle was licensed, or otherwise authorised, by the CEO or a corresponding authority, to be driven or towed on a road; and

(ii) was not required to comply with a similar provision before that commencement;

or

(d) the vehicle has been constructed, equipped or adapted so as to enable it to be driven by a person with a physical disability who cannot safely drive a vehicle that has not been so constructed, equipped or adapted; or

(e) it would be unreasonable to require the vehicle to comply with the provision.

(3) When deciding whether to grant a CEO exemption, the CEO must take into account the likelihood and significance of any adverse effect on safety or the environment if the exemption were granted.

(4) In deciding whether to grant a CEO exemption on the basis that it would be unreasonable for a vehicle to comply with a provision, the CEO must take into account all of these things —

(a) the use or proposed use of the vehicle or combination of which the vehicle is a part;

(b) the nature of the exemption;

(c) whether or not the vehicle or combination of which the vehicle is a part can be operated safely despite not complying with the provision;

(d) the public interest in the vehicle or combination of which the vehicle is a part not complying with the provision.

463. Variation of a CEO exemption

(1) The CEO may vary a CEO exemption only if satisfied —

(a) that —

(i) since the exemption was granted, a change has happened in relation to something the CEO considered in deciding to grant the exemption; and

(ii) the exemption would have been granted as it is proposed to be varied if the change had happened before the exemption was given;

or

(b) that the application for the exemption was false or misleading in a material respect but the circumstances do not require its cancellation.

(2) In deciding whether to vary a CEO exemption, the CEO must take into account the likelihood and significance of any adverse effect on safety or the environment if the variation were made.

464. Cancellation of CEO exemptions

The CEO may cancel a CEO exemption only if —

(a) since the exemption was granted —

(i) a change has happened in relation to something the CEO considered in deciding to grant the exemption; and

(ii) the exemption would not have been granted if the change had happened before the exemption was given;

or

(b) the application for the exemption was false or misleading in a material respect.

465. Variation or cancellation of CEO exemption in urgent circumstances

The CEO must vary or cancel a CEO exemption if satisfied that —

(a) the CEO could vary the exemption under regulation 463(1) or cancel the exemption under regulation 464; and

(b) it is necessary to vary or cancel the exemption immediately to avoid, eliminate or minimise the risk of personal injury or death, property damage or harm to the environment.

466. Variation or cancellation of CEO exemption other than in urgent circumstances

(1) The CEO may vary or cancel a CEO exemption if satisfied that —

(a) the CEO could vary the exemption under regulation 463(1) or cancel the exemption under regulation 464; but

(b) it is not necessary to vary or cancel the exemption immediately to avoid, eliminate or minimise the risk of personal injury or death, property damage or harm to the environment.

(2) If the CEO exemption had been granted or varied previously on an application the CEO must, before taking action under subregulation (1) —

(a) inform each person to whom the exemption applies in writing —

(i) of the proposed variation or cancellation; and

(ii) of the reasons for the proposed variation or cancellation; and

(iii) that the person may, within a stated time of at least 28 days after the notice is given to the

person, provide written submissions as to why the exemption should not be varied or cancelled as proposed by the CEO (the ***proposed action***);

and

(b) consider the submissions provided.

Division 4 — General provisions about Ministerial declarations and CEO exemptions

467. Applications

(1) An application must be in a form approved by the CEO and given to the CEO.

(2) An application for the grant, variation or cancellation of a CEO exemption must be accompanied by the fee, if any, that is applicable under regulation 468.

(3) The Minister may, by written notice, require an applicant for the making, variation or revocation of a declaration to give the Minister additional information necessary to decide the application.

(4) The CEO may, by written notice, require an applicant for the grant, variation or cancellation of a CEO exemption to give the CEO additional information necessary to decide the application.

468. Fees for applications

(1) The fee payable for an application for the grant, variation or cancellation of a CEO exemption is $55.70.

(2) The CEO may reduce, waive or refund the fee payable under subregulation (1) if it would, in the opinion of the CEO, be unreasonable for the applicant to pay the fee taking into account —

(a) the circumstance of the applicant; and

(b) the use or proposed use of the vehicle; and

(c) the nature of the exemption; and

(d) the extent to which the CEO has or will examine or assess the vehicle or application.

[Regulation 468 amended: Gazette 14 Jun 2016 p. 2000; 31 May 2019 p. 1726; SL 2020/74 r. 9; SL 2021/92 r. 20; SL 2023/43 r. 42; SL 2024/58 r. 23.]

469. Conditions on declarations, CEO exemptions

(1) The Minister may impose conditions on a declaration or a varied declaration.

(2) The CEO may impose conditions on a CEO exemption or a varied CEO exemption.

(3) A person to whom a declaration or CEO exemption applies, or who is in charge of a vehicle to which a declaration or CEO exemption applies, must not contravene a condition imposed on the declaration or CEO exemption.

Penalty for an offence under this subregulation: a fine of 16 PU.

470. Notification of Minister's decisions

(1) In this regulation —

affected person —

(a) in the case of a decision made on an application means —

(i) each applicant; and

(ii) each other person to whom, in the opinion of the Minister, the decision applies;

and

(b) in the case of a decision made on the Minister's volition means each person, in the Minister's opinion, to whom the decision applies.

(2) As soon as practicable after making a decision under Division 2 or regulation 469(1), the Minister must give each affected person notice in writing of the decision.

(3) For the purposes of subregulation (2), notice in writing may be given —

(a) individually to each affected person; or

(b) by publication in the *Gazette*; or

(c) by other means that, in the Minister's opinion, is sufficient to notify persons to whom the decision applies.

471. Notification and reconsideration of CEO exemption decisions

Part 15 provides for the notification and reconsideration of the CEO's decisions made under Division 3 and regulation 469(2).

472. When decisions take effect

(1) A decision of the Minister under Division 2 or regulation 469(1) takes effect —

(a) when notice is given under regulation 470(2) of the decision; or

(b) if the notice specifies that the decision takes effect at a later time — at the later time.

(2) A decision of the CEO under Division 3 or regulation 469(2) takes effect —

(a) when written notice is given under regulation 479(2) of the decision; or

(b) if the notice specifies that the decision takes effect at a later time — at the later time.

473. Duration of declaration, CEO exemption

A declaration or CEO exemption has effect for the specified period.

474. Effect of declaration, CEO exemption

(1) A declaration, including a varied declaration, has effect according to its tenor.

(2) A CEO exemption, including a varied CEO exemption, has effect according to its tenor.

475. Evidence of declarations, CEO exemption

(1) The CEO must issue a document setting out the terms of a declaration made, or CEO exemption granted, on an application.

(2) If a declaration made, or CEO exemption granted, on application is varied, the CEO must issue a replacement document setting out the new terms of the declaration or exemption.

(3) If the CEO is satisfied that a document has been defaced, destroyed, lost or stolen, the CEO must provide, on payment of a fee of $25, a replacement document to the person to whom the document was issued.

476. Driver to produce declaration, CEO exemption document to police officers

A person driving a vehicle in respect of which a document has been issued under regulation 475 must, if required to do so by a police officer, produce the document for inspection.

Penalty: a fine of 16 PU.

Modified penalty: 4 PU.

477. Return of documents

(1) The CEO may, by written notice, require a person issued with a document under regulation 475 in respect of a declaration that is varied or revoked or a CEO exemption that is varied or cancelled to return the document to the CEO within a time stated in the notice which must be at least 7 days after the notice is given.

(2) A person must comply with a requirement in a notice under subregulation (1).

Penalty for an offence under this subregulation: a fine of 16 PU.

Part 15 — Notification and reconsideration of reviewable decisions

Division 1 — Reviewable decisions other than improvement notice reviewable decisions

478. Terms used

In this Division —

CEO exemption reviewable decision means a decision —

(a) under Part 14 Division 3 to grant, vary or cancel a CEO exemption or to refuse to do any of those things; or

(b) under regulation 469(2) to impose, or refuse to impose, a condition on a CEO exemption or a varied CEO exemption;

decision maker —

(a) in the case of a CEO exemption reviewable decision, means the CEO; and

(b) in the case of an MDL reviewable decision, means the Commissioner of Main Roads; and

(c) in the case of a vehicle licensing reviewable decision, means the CEO;

MDL reviewable decision means a decision —

(a) under Part 4 Division 2 of the Act to modify or refuse to modify a mass or dimension requirement; or

(b) under Part 4 Division 2 of the Act to vary, suspend or cancel a modified mass or dimension requirement or to refuse to do any of those things; or

(c) to specify or to refuse to specify in an order or permit, as defined in section 32, a matter in relation to a modified mass or dimension requirement; or

(d) under Part 4 Division 3 of the Act to give, vary, suspend or cancel an access approval or to refuse to do any of those things; or

(e) to specify or to refuse to specify in an order or permit, as defined in section 38, a matter in relation to an access approval; or

(f) to accredit, or to refuse to accredit, a person under Part 4 Division 4 of the Act; or

(g) under Part 4 Division 4 of the Act, to vary, suspend or cancel an accreditation, to impose a requirement in relation to an accreditation or to refuse to do any of those things; or

(h) under regulation 188 to exempt a vehicle or its load or a vehicle and its load from the application of a mass, dimension or loading requirement in an emergency area, to impose a condition on an exemption or to refuse to do any of those things;

(i) under regulation 454G to refuse an application for a heavy vehicle pilot licence; or

(j) under regulation 454H(2) to impose a condition on a heavy vehicle pilot licence; or

(k) under regulation 454N to amend a heavy vehicle pilot licence other than an amendment to remove a condition of the licence; or

(l) under regulation 454Q or 454R to suspend or cancel a heavy vehicle pilot licence;

reviewable decision means —

(a) a CEO exemption reviewable decision; or

(b) an MDL reviewable decision; or

(c) a vehicle licensing reviewable decision;

vehicle licensing reviewable decision means a decision under Part 2 of the Act to grant, renew, transfer, vary, cancel or suspend a licence, or to refuse to do any of those things.

[Regulation 478 amended: Gazette 15 Nov 2016 p. 5076.]

479. Notification of reviewable decisions

(1) In this regulation —

affected person —

(a) in the case of a reviewable decision made on an application, means —

(i) each applicant; and

(ii) each other person to whom, in the opinion of the decision maker, the decision applies;

and

(b) in the case of a reviewable decision made on the volition of the decision maker to vary or cancel a decision previously made on application, means —

(i) each applicant for the previous decision; and

(ii) each other person to whom, in the opinion of the decision maker, the decision applies;

and

(c) in the case of any other reviewable decision made on the volition of the decision maker, means each person, in the opinion of the decision maker, to whom the decision applies.

(2) As soon as practicable after making a reviewable decision, the decision maker must give notice in writing to each affected person —

(a) of the decision; and

(b) setting out the reasons for the reviewable decision if the decision differs from that sought by an affected person; and

(c) informing the person that —

(i) under regulation 480, an affected person may request the decision maker to reconsider the reviewable decision; and

(ii) under the *Road Traffic (Administration) Regulations 2014* Part 9, the person may apply to the State Administrative Tribunal for a review of the reviewable decision or the decision made on reconsidering the reviewable decision under regulation ~~483~~480.

(3) For the purposes of subregulation (2), notice in writing may be given —

(a) individually to each affected person; or

(b) by publication in the *Gazette*; or

(c) by other means that, in the opinion of the decision maker, is sufficient to notify persons to whom the decision applies.

[Regulation 479 amended: SL 2022/174 r. ~~19~~19; SL 2026/204 r. 15.]

480. Reconsideration of reviewable decisions

(1) A person affected by a reviewable decision may request the decision maker in writing to reconsider the decision.

(2) The request must be made within —

(a) 28 days after notice of the decision is given under regulation 479(2); or

(b) a longer period that is allowed by the decision maker.

(3) A request for reconsideration must state the decision that the affected person wants the decision maker to make after reconsideration of the reviewable decision and outline why the decision maker should make that decision.

(4) Within 28 days after receiving the request, the decision maker must reconsider the reviewable decision and —

(a) confirm the decision; or

(b) amend the decision; or

(c) set aside the decision and substitute a new decision.

(5) The decision maker must, in writing, inform the person who made the request —

(a) of the result of the reconsideration; and

(b) if the decision maker does not make the decision sought by the person —

(i) of the reasons for the decision made on reconsidering the reviewable decision; and

(ii) that the person may apply to the State Administrative Tribunal for a review of the decision made on reconsidering the reviewable decision.

Division 2 — Improvement notices and notices of amendments to improvement notices

481. Terms used

In this Division —

consulting officer has the meaning given in section 78(4);

improvement notice has the meaning given in section 77;

improvement notice reviewable decision means a decision —

(a) under section 78(1) or (2) to give an improvement notice; or

(b) under section 81(1) or (2) to amend an improvement notice.

482. Content of improvement notices, notices of amendment of improvement notices

(1) In addition to the matters set out in section 79, an improvement notice must —

(a) state whether or not a discussion with a consulting officer took place under section 78(3); and

(b) if a discussion with a consulting officer did not take place, specify if, and what, attempts were made to contact a consulting officer; and

(c) state that the improvement notice may be cancelled under section 82(1) or (2); and

(d) advise the person to be given the notice that —

(i) under regulation 483, the person may request a consulting officer to reconsider the improvement notice reviewable decision; and

(ii) under the *Road Traffic (Administration) Regulations 2014* Part 9, the person may apply to the State Administrative Tribunal for a review of the improvement notice reviewable decision or the decision made on reconsidering the reviewable decision under regulation 483.

(2) In addition to the matters set out in section 81(5), notice of an amendment of an improvement notice must inform the person to be given the notice that —

(a) under regulation 483, the person may request a consulting officer to reconsider the improvement notice reviewable decision; and

(b) under the *Road Traffic (Administration) Regulations 2014* Part 9, the person may apply to the State Administrative Tribunal for a review of the improvement notice reviewable decision or the decision made on reconsidering the reviewable decision under regulation 483.

483. Reconsideration of improvement notice reviewable decisions

(1) A person affected by an improvement notice reviewable decision may request a consulting officer in writing to reconsider the decision.

(2) The request must be made within —

(a) 28 days after receipt of the notice under section 78 or 81; or

(b) a longer period that is allowed by a consulting officer.

(3) A request for reconsideration must state the decision that the affected person wants the consulting officer to make after reconsideration of the improvement notice reviewable decision and outline why the consulting officer should make that decision.

(4) Within 28 days after receiving the request, a consulting officer must reconsider the improvement notice reviewable decision and —

(a) confirm the decision; or

(b) amend the decision; or

(c) set aside the decision and substitute a new decision.

(5) The consulting officer must, in writing, inform the affected person —

(a) of the result of the reconsideration; and

(b) if the consulting officer does not make the decision sought by the person —

(i) of the reasons for the decision made on reconsidering the improvement notice reviewable decision; and

(ii) that the person may apply to the State Administrative Tribunal for a review of the decision made on reconsidering the improvement notice reviewable decision.

Part 16 — Transitional provisions relating to *Road Traffic (Vehicles) Regulations 2014*

484. Term used: commencement day

In this Part —

commencement day means the day fixed under the *Road Traffic (Administration) Act 2008* section 2(b).

485. Application for permits for unlicensed vehicles

An application that was made under the *Road Traffic (Licensing) Regulations 1975* regulation 11(2) before commencement day but not decided before commencement day must, on and from commencement day, be taken to be an application made under regulation 44(1) of these regulations.

486. Permit documents

A permit document issued under the *Road Traffic (Licensing) Regulations 1975* regulation 11(4) that was in effect immediately before commencement day must, on and from commencement day, be taken to be a permit document issued under regulation 45 of these regulations.

487. Authorisations to carry goods other than stock

An authorisation under the *Road Traffic (Charges and Fees) Regulations 2006* regulation 14(3) that was in effect immediately before commencement day must, on and from commencement day, be taken to be an authorisation under regulation 79(3) of these regulations.

488. Number plate non-reflective film, cover

A transparent film or cover approved for the purposes of the *Road Traffic (Licensing) Regulations 1975* regulation 25AA(11)(a) must, on and from commencement day,

be taken to be a transparent film or cover approved for the purposes of regulation 120(11)(a) of these regulations.

*[**489, 490.** Deleted: Gazette 24 Jun 2016 p. 2343.]*

491. Written-off vehicles

(1) A written-off vehicle notice as defined in the *Road Traffic (Written-Off Vehicle Register) Regulations 2003* regulation 2 that was in effect immediately before commencement day must, on and from commencement day, be taken to be a written-off vehicle notice as mentioned in regulation 152(2)(a) of these regulations.

(2) A written-off warning label as defined in the *Road Traffic (Written-Off Vehicle Register) Regulations 2003* regulation 2 that was in effect immediately before commencement day must, on and from commencement day, be taken to be a written-off warning label as mentioned in regulation 152(2)(b)(i) of these regulations.

(3) The Written-Off Vehicle Register under the *Road Traffic (Written-Off Vehicle Register) Regulations 2003* regulation 13 that was in effect immediately before commencement day must, on and from commencement day, be taken to be the WOVR for these regulations.

492. RAV notices or RAV permits to have effect as orders or permits by which mass or dimension requirements modified

(1) A class 1 notice under the *Road Traffic (Vehicle Standards) Regulations 2002* that was in effect immediately before commencement day must, on and from commencement day, be taken to be an order mentioned in section 34(1)(a) by which a mass or dimension requirement is modified.

(2) A class 3 notice under the *Road Traffic (Vehicle Standards) Regulations 2002* that was in effect immediately before commencement day must, on and from commencement day, be

taken to be an order mentioned in section 34(1)(a) by which a mass or dimension requirement is modified.

(3) ~~Subreglation~~Subregulation (2) is subject to section 149.

(4) A class 1 permit under the *Road Traffic (Vehicle Standards) Regulations 2002* that was in effect immediately before commencement day must, on and from commencement day, be taken to be a permit mentioned in section 34(1)(b) by which a mass or dimension requirement is modified.

(5) A class 3 permit under the *Road Traffic (Vehicle Standards) Regulations 2002* that was in effect immediately before commencement day must, on and from commencement day, be taken to be a permit mentioned in section 34(1)(b) by which a mass or dimension requirement is modified.

[Regulation 492 amended: SL 2026/204 r. 16.]

493. Class 2 notices or permits to have effect as orders or permits by which access approvals given

(1) A class 2 notice under the *Road Traffic (Vehicle Standards) Regulations 2002* that was in effect immediately before commencement day must, on and from commencement day, be taken to be an order mentioned in section 41(1)(a) by which an access approval is given.

(2) A class 2 permit under the *Road Traffic (Vehicle Standards) Regulations 2002* that was in effect immediately before commencement day must, on and from commencement day, be taken to be a permit mentioned in section 41(1)(b) by which an access approval is given.

494. Accreditation

A person who, immediately before commencement day, holds an accreditation certificate under the *Road Traffic (Vehicle Standards) Regulations 2002* regulation 23 must, on and from commencement day, be taken to be accredited for the purposes

of sections 33(4) and 40(2), on the same terms and conditions that applied to the person's accreditation certificate immediately before commencement day.

495. Emergency vehicles, transport enforcement vehicles

(1) A declaration under the *Road Traffic (Vehicle Standards) Regulations 2002* Glossary clause 1(3)(a) that is in effect immediately before commencement day must, on and from commencement day, be taken to be a declaration under regulation 227(a).

(2) A declaration under the *Road Traffic (Vehicle Standards) Regulations 2002* Glossary clause 1(3)(b) that is in effect immediately before commencement day must, on and from commencement day, be taken to be a declaration under regulation 227(b).

496. Tow truck crane certificates

A certificate under the *Road Traffic (Tow Truck) Regulations 1975* regulation 8(4) that was in effect immediately before commencement day must, on and from commencement day, be taken to be a certificate under regulation 412(4) of these regulations.

497. Gate to gate towing

An approval under the *Road Traffic (Towed Agricultural Implements) Regulations 1995* regulation 31(1)(a) that was in effect immediately before commencement day must, on and from commencement day, be taken to be an approval under regulation 425(3)(a) of these regulations.

498. Approval to use oversize agricultural combinations on metropolitan roads

An approval under the *Road Traffic (Towed Agricultural Implements) Regulations 1995* regulation 19(2) that was in effect immediately before commencement day must, on and

from commencement day, be taken to be an approval under regulation 448(2) of these regulations.

499. Permissions to move excessively high agricultural combinations

A written permission under the *Road Traffic (Towed Agricultural Implements) Regulations 1995* regulation 27(1) that was in effect immediately before commencement day must, on and from commencement day, be taken to be a written permission under regulation 452(1) of these regulations.

500. Permits to move excessively wide or long agricultural combinations

A permit under the *Road Traffic (Towed Agricultural Implements) Regulations 1995* regulation 28 that was in effect immediately before commencement day must, on and from commencement day, be taken to be a permit under regulation 453 of these regulations.

501. Permits to move agricultural combinations

A permit under the *Road Traffic (Towed Agricultural Implements) Regulations 1995* regulation 29B that was in effect immediately before commencement day must, on and from commencement day, be taken to be a permit under regulation 454 of these regulations.

502. Agricultural implement exemptions

(1) In this regulation —

AI exemption means an exemption under the *Road Traffic (Towed Agricultural Implements) Regulations 1995* regulation 29A as that regulation was in effect immediately before commencement day.

(2) An AI exemption, exempting an agricultural implement from the operation of any provision of the *Road Traffic (Towed*

Agricultural Implements) Regulations 1995 (the ***former provision***), that was in effect immediately before commencement day must, on and from commencement day, be taken to be an exemption granted by the CEO under regulation 462(1) of these regulations exempting the agricultural implement from the provision of Part 13 Division 2 (other than regulation 434 or 435) of these regulations that corresponds to the former provision, on the same conditions as the AI exemption.

(3) An application for an AI exemption that was made before commencement day but not decided before commencement day must, on and from commencement day, be taken to be an application made under regulation 467 of these regulations.

503. SAT reviews of certain vehicle licensing decisions

(1) In this regulation —

former section 25(1) means the *Road Traffic Act 1974* section 25(1) as it was in effect immediately before commencement day.

(2) Without affecting the *Interpretation Act 1984* section 37(1) —

(a) any right under former section 25(1) to apply to the State Administrative Tribunal for a review is not affected by the repeal of former section 25(1) by the *Road Traffic Legislation Amendment Act 2012* section 8; and

(b) any review that had started, but was not finalised, before commencement day must be dealt with as if former section 25(1) were still in operation.

(3) A vehicle licence that is granted, renewed, transferred or varied as a result of the review must be taken to be a vehicle licence under the *Road Traffic (Vehicles) Act 2012* applying in accordance with the grant, renewal, transfer or variation.

(4) If, on the review, the cancellation or suspension of a vehicle licence is set aside, the licence must be taken to be a vehicle licence under the *Road Traffic (Vehicles) Act 2012* applying in

accordance with the decision to set aside the cancellation or suspension.

504. Ministerial exemptions

(1) In this regulation —

Ministerial exemption has the meaning that it had in the *Road Traffic (Vehicle Standards) Regulations 2002* Glossary immediately before commencement day.

(2) A Ministerial exemption, declaring that a provision of the *Road Traffic (Vehicle Standards) Regulations 2002* or the *Road Traffic (Vehicle Standards) Rules 2002* (the ***former provision***) does not apply to a person or vehicle, that was in effect immediately before commencement day must, on and from commencement day, be taken to be a declaration of the Minister under regulation 457(1) of these regulations exempting the person or vehicle from the provision of the *Road Traffic (Vehicles) Act 2012* or of these regulations that corresponds to the former provision, on the same conditions as the Ministerial exemption.

(3) An application for a Ministerial exemption that was made before commencement day but not decided before commencement day must, on and from commencement day, be taken to be an application made under regulation 467 of these regulations.

505. Departmental exemptions

(1) In this regulation —

departmental exemption has the meaning that it had in the *Road Traffic (Vehicle Standards) Regulations 2002* Glossary immediately before commencement day.

(2) A departmental exemption, exempting a person or vehicle from a provision of a regulation made under the *Road Traffic Act 1974* section 111(2)(d) (the ***former provision***), that was in effect before commencement day must, on and from commencement day, be taken to be an exemption granted by the

CEO under regulation 462(1) of these regulations exempting the person or vehicle from the provision of the *Road Traffic (Vehicles) Act 2012* or of these regulations that corresponds to the former provision, on the same conditions as the departmental exemption.

(3) An application for a departmental exemption that was made before commencement day but not decided before commencement day must, on and from commencement day, be taken to be an application made under regulation 467 of these regulations.

506. Magistrates Court reviews of reconsidered decisions about departmental exemptions

(1) In this regulation —

former regulation 60 means the *Road Traffic (Vehicle Standards) Regulations 2002* regulation 60 as it was in effect immediately before commencement day.

(2) Without affecting the *Interpretation Act 1984* section 37(1) —

(a) any right under former regulation 60 to apply to the Magistrates Court for a review of a decision reconsidered by the Director General under the *Road Traffic (Vehicle Standards) Regulations 2002* regulation 59 is not affected by the repeal of those regulations by the *Road Traffic (Repeals and Amendment) Regulations 2014* regulation 3; and

(b) any review that had started, but was not finalised, before commencement day must be dealt with as if former regulation 60 were still in operation.

(3) If, on the review, the Magistrates Court decides to grant or amend an exemption from a provision of a regulation made under the *Road Traffic Act 1974* section 111(2)(d) as it was in effect before commencement day (the ***former provision***), the exemption must be taken to be an exemption from the provision

of the *Road Traffic (Vehicles) Act 2012* or of these regulations that corresponds to the former provision.

507. Certain vehicle standards approvals

(1) A colour for a flashing light approved for the purposes of the *Road Traffic (Vehicle Standards) Regulations 2002* regulation 5(1)(g)(iii) must, on and from commencement day, be taken to be a colour approved for the purposes of regulation 228(g)(iii) of these regulations.

(2) A light or reflector approved for the purposes of the *Road Traffic (Vehicle Standards) Rules 2002* rule 112(4)(a) must, on and from commencement day, be taken to be a light or reflector approved for the purposes of regulation 327(3)(a).

(3) A colour for a flashing light approved for the purposes of the *Road Traffic (Vehicle Standards) Rules 2002* rule 112(4)(b) must, on and from commencement day, be taken to be a colour approved for the purposes of regulation 327(3)(b).

(4) A vehicle approved for the purposes of paragraph (e) of the definition of ***exempt vehicle*** in the *Road Traffic (Vehicle Standards) Rules 2002* rule 112(1) must, on and from commencement day, be taken to be a vehicle approved for the purposes of paragraph (e) of the definition of ***exempt vehicle*** in regulation 327(4).

(5) A vehicle approved for the purposes of paragraph (f) of the definition of ***special use vehicle*** in the *Road Traffic (Vehicle Standards) Rules 2002* rule 112(1) must, on and from commencement day, be taken to be a vehicle approved for the purposes of paragraph (f) of the definition of ***special use vehicle*** in regulation 327(4).

Part 17 — Other transitional provisions

[Heading inserted: SL 2024/58 r. 15.]

Division 1 — Transitional provision relating to *Transport Regulations Amendment (Fees and Charges) Regulations 2019* Part 3 Division 2

[Heading inserted: SL 2024/58 r. 16.]

508. Recording fees

Regulation 99, as in force immediately before the *Transport Regulations Amendment (Fees and Charges) Regulations 2019* Part 3 Division 2 comes into operation, continues to apply in relation to —

(a) the grant of a vehicle licence if that licence is granted before 1 July 2019; and

(b) the renewal of a vehicle licence if, in accordance with these regulations, that renewal has effect, or is to be taken to have effect, on and from a day that precedes 1 July 2019.

[Regulation 508 inserted: Gazette 17 May 2016 p. 1440.]

Division 2 — Transitional provision relating to *Road Traffic (Vehicles) Amendment Regulations (No. 4) 2022*

[Heading inserted: SL 2024/58 r. 17.]

[Heading deleted: SL 2024/58 r. 18.]

509. Renewal by direct debit

The amendments to these regulations made by the *Road Traffic (Vehicles) Amendment Regulations (No. 4) 2022* regulations 6, 7 and 10 do not apply in relation to a renewal of a vehicle licence,

or the application for the renewal, if the application is made before 27 September 2022.

[Regulation 509 inserted: SL 2022/149 r. 12.]

[Heading deleted: SL 2024/58 r. 20.]

Division 3 — Transitional provision relating to *Road Traffic (Vehicles) Amendment Regulations (No. 2) 2022*

[Heading inserted: SL 2024/58 r. 19.]

510. Tow trucks licensed during transitional period taken to comply with regulations

(1) A tow truck in respect of which a vehicle licence is in effect immediately before 7 November 2023 is taken to comply with Part 12 Division 1 provided the tow truck complies with Part 12 Division 1 as it was in force immediately before 7 November 2023.

(2) Subregulation (1) ceases to operate in relation to a vehicle licence on the day on which —

(a) the licence expires or is cancelled; or

(b) if the licence is renewed — the licence would have expired had it not been renewed.

[Regulation 510 inserted: SL 2022/174 r. 20.]

Division 4 — Transitional provision relating to *Transport Regulations Amendment (Fees and Charges) Regulations 2024* Part 4 Division 2

[Heading inserted: SL 2024/58 r. 21.]

511. Recording fees

Regulation 99, as in force immediately before the *Transport Regulations Amendment (Fees and Charges) Regulations 2024*

Part 4 Division 2 comes into operation, continues to apply in relation to —

(a) the grant of a vehicle licence if that licence is granted before 1 July 2024; and

(b) the renewal of a vehicle licence if, in accordance with these regulations, that renewal has effect, or is to be taken to have effect, on and from a day that precedes 1 July 2024.

[Regulation 511 inserted: SL 2024/58 r. 21.]

Division 5 — Transitional provision relating to *Transport Regulations Amendment (Fees and Charges) Regulations 2025* Part 4 Division 2

[Heading inserted: SL 2025/65 r. 13.]

512. Recording fees

Regulation 99, as in force immediately before the *Transport Regulations Amendment (Fees and Charges) Regulations 2025* Part 4 Division 2 comes into operation, continues to apply in relation to —

(a) the grant of a vehicle licence if that licence is granted before 1 July 2025; and

(b) the renewal of a vehicle licence if, in accordance with these regulations, that renewal has effect, or is to be taken to have effect, on and from a day that precedes 1 July 2025.

[Regulation 512 inserted: SL 2025/65 r. 13.]

Division 6 — Transitional provision relating to *Transport Regulations Amendment (Fees and Charges) Regulations 2026* Part 3 Division 2

[Heading inserted: SL 2026/63 r. 10.]

513. Recording fees

Regulation 99, as in force immediately before the *Transport Regulations Amendment (Fees and Charges) Regulations 2026* Part 3 Division 2 comes into operation, continues to apply in relation to —

(a) the grant of a vehicle licence if that licence is granted before 1 July 2026; and

(b) the renewal of a vehicle licence if, in accordance with these regulations, that renewal has effect, or is to be taken to have effect, on and from a day that precedes 1 July 2026.

[Regulation 513 inserted: SL 2026/63 r. 10.]

Notes

This is a compilation of the *Road Traffic (Vehicles) Regulations 2014* and includes amendments made by other written laws. For provisions that have come into operation, and for information about any reprints, see the compilation table.

Compilation table

Citation	Published	Commencement
Road Traffic (Vehicles) Regulations 2014	23 Dec 2014 p. 5103-444	27 Apr 2015 (see r. 2 and *Gazette* 17 Apr 2015 p. 1371)
Road Traffic (Vehicles) Amendment Regulations (No. 3) 2015 [2]	27 May 2015 p. 1865-6	27 May 2015 (see note under r. 1)
Road Traffic (Vehicles) Amendment Regulations (No. 5) 2015 [2]	27 May 2015 p. 1867-71	27 May 2015 (see note under r. 1)
Road Traffic (Vehicles) Amendment Regulations (No. 4) 2015	12 Jun 2015 p. 2036-40	r. 1 and 2: 12 Jun 2015 (see r. 2(a)); Regulations other than r. 1 and 2: 1 Jul 2015 (see r. 2(b))
Transport Regulations Amendment (Fees and Charges) Regulations 2016 Pt. 4 [3]	27 May 2016 p. 1549-54	27 May 2016 (see r. 2(a))
Transport Regulations Amendment (Fees and Charges) Regulations (No. 2) 2016 Pt. 6	14 Jun 2016 p. 1987-2003	1 Jul 2016 (see r. 2(b))
Road Traffic Regulations Amendment Regulations 2016 Pt. 3	24 Jun 2016 p. 2342-3	1 Jul 2016 (see r. 2(b))
Road Traffic (Vehicles) Amendment Regulations (No. 3) 2016	20 Sep 2016 p. 3982-3	r. 1 and 2: 20 Sep 2016 (see r. 2(a)); r. 3 and 4: 21 Sep 2016 (see. r. 2(b)); r. 5: 24 Oct 2016 (see r. 2(c))
Road Traffic Regulations Amendment (Pilot Vehicle Drivers) Regulations 2016 Pt. 2	15 Nov 2016 p. 5062-77	28 Nov 2016 (see r. 2(b))
Road Traffic (Vehicles) Amendment Regulations 2017	20 Jan 2017 p. 651-2	r. 1 and 2: 20 Jan 2017 (see r. 2(a)); Regulations other than r. 1 and 2: 8 Mar 2017 (see r. 2(b))
Road Traffic (Vehicles) Amendment Regulations (No. 2) 2017 [1, 4]	7 Feb 2017 p. 1177-8	7 Feb 2017 (see note under r. 1)

Citation	Published	Commencement
Transport Regulations Amendment (Fees and Charges) Regulations 2017 Pt. 6 [5]	26 May 2017 p. 2639-45	26 May 2017 (see r. 2(a))
Transport Regulations Amendment (Fees and Charges) Regulations (No. 2) 2017 Pt. 5	23 Jun 2017 p. 3253-78	1 Jul 2017 (see r. 2(b))
Road Traffic (Vehicles) Amendment Regulations (No. 3) 2017	1 Dec 2017 p. 5739	r. 1 and 2: 1 Dec 2017 (see r. 2(a)); Regulations other than r. 1 and 2: 2 Dec 2017 (see r. 2(b))
Reprint 1: The *Road Traffic (Vehicles) Regulations 2014* as at 5 Jan 2018 (includes amendments listed above)		
Transport Regulations Amendment (Fees and Charges) Regulations 2018 Pt. 6 [6]	25 May 2018 p. 1640-7	25 May 2018 (see r. 2(a))
Transport Regulations Amendment (Fees and Charges) Regulations (No. 2) 2018 Pt. 6	22 Jun 2018 p. 2184-93	1 Jul 2018 (see r. 2(b))
Road Traffic (Vehicles) Amendment Regulations (No. 3) 2019	29 Mar 2019 p. 962-72	r. 1 and 2: 29 Mar 2019 (see r. 2(a)); Regulations other than r. 1 and 2: 30 Mar 2019 (see r. 2(b))
Transport Regulations Amendment (Fees and Charges) Regulations 2019 Pt. 3 [7]	17 May 2019 p. 1437-42	18 May 2019 (see r. 2(b))
Transport Regulations Amendment (Fees and Charges) Regulations (No. 2) 2019 Pt. 6	31 May 2019 p. 1721-8	1 Jul 2019 (see r. 2(b))
Road Traffic (Vehicles) Amendment Regulations 2019	18 Jun 2019 p. 2061	r. 1 and 2: 18 Jun 2019 (see r. 2(a)); Regulations other than r. 1 and 2: 1 Jul 2019 (see r. 2(b))
Transport Regulations Amendment (Road Passenger Services) Regulations (No. 2) 2019 Pt. 3	26 Jun 2019 p. 2229-371	2 Jul 2019 (see r. 2(d) and *Gazette* 28 Jun 2019 p. 2473)
Road Traffic (Vehicles) Amendment Regulations (No. 3) 2020 [8]	SL 2020/73 9 Jun 2020	r. 1 and 2: 9 Jun 2020 (see r. 2(a)); Regulations other than r. 1 and 2: 10 Jun 2020 (see r. 2(b))

Citation	Published	Commencement
Transport Regulations Amendment (Fees and Charges) Regulations (No. 2) 2020 Pt. 4	SL 2020/74 9 Jun 2020	1 Jul 2020 (see r. 2(b))
Transport Regulations Amendment (Road Passenger Services) Regulations 2020 Pt. 4	SL 2020/91 24 Jun 2020	1 Jul 2020 (see r. 2(c) and SL 2020/89 cl. 2)
Transport Regulations Amendment (Road Traffic) Regulations (No. 2) 2020 Pt. 3	SL 2020/231 4 Dec 2020	14 Dec 2020 (see r. 2(b) and SL 2020/229 cl. 2)
Road Traffic (Vehicles) Amendment Regulations (No. 4) 2021	SL 2021/37 9 Apr 2021	r. 1 and 2: 9 Apr 2021 (see r. 2(a)); Regulations other than r. 1 and 2: 10 Apr 2021 (see r. 2(b))
Road Traffic (Vehicles) Amendment Regulations (No. 6) 2021 [9]	SL 2021/64 21 May 2021	r. 1 and 2: 21 May 2021 (see r. 2(a)); Regulations other than r. 1 and 2: 22 May 2021 (see r. 2(b))
Transport Regulations Amendment (Fees and Charges) Regulations (No. 2) 2021 Pt. 5	SL 2021/92 18 Jun 2021	1 Jul 2021 (see r. 2(c))
Road Traffic Regulations Amendment Regulations 2021 Pt. 3	SL 2021/93 22 Jun 2021	23 Jun 2021 (see r. 2(b))
Road Traffic (Vehicles) Amendment Regulations (No. 7) 2021	SL 2021/81 22 Jun 2021	r. 1 and 2: 22 Jun 2021 (see r. 2(a)); Regulations other than r. 1 and 2: 1 Jul 2021 (see r. 2(b))
Transport Regulations Amendment (Electric Rideable Devices) Regulations 2021 Pt. 3	SL 2021/199 3 Dec 2021	4 Dec 2021 (see r. 2(b) and SL 2021/200 r. 2(b))
Road Traffic (Vehicles) Amendment Regulations 2021	SL 2021/206 3 Dec 2021	r. 1 and 2: 3 Dec 2021 (see r. 2(a)); Regulations other than r. 1 and 2: 4 Dec 2021 (see r. 2(b))
Road Traffic (Vehicles) Amendment Regulations 2022	SL 2022/16 25 Feb 2022	r. 1 and 2: 25 Feb 2022 (see r. 2(a)); Regulations other than r. 1 and 2: 26 Feb 2022 (see r. 2(b))
Transport Regulations Amendment (Work Health and Safety) Regulations 2022 Pt. 3	SL 2022/23 11 Mar 2022	31 Mar 2022 (see r. 2(b) and SL 2022/18 cl. 2)

Citation	Published	Commencement
Road Traffic (Vehicles) Amendment Regulations (No. 3) 2022 [10]	SL 2022/57 20 May 2022	r. 1 and 2: 20 May 2022 (see r. 2(a)); Regulations other than r. 1 and 2: 21 May 2022 (see r. 2(b))
Transport Regulations Amendment (Fees and Charges) Regulations (No. 2) 2022 Pt. 5	SL 2022/67 3 Jun 2022	1 Jul 2022 (see r. 2(b))
Road Traffic (Vehicles) Amendment Regulations (No. 5) 2022	SL 2022/130 5 Jul 2022	r. 1 and 2: 5 Jul 2022 (see r. 2(a)); Regulations other than r. 1 and 2: 6 Jul 2022 (see r. 2(b))
Road Traffic (Vehicles) Amendment Regulations (No. 4) 2022 [11]	SL 2022/149 26 Aug 2022	r. 1 and 2: 26 Aug 2022 (see r. 2(a)); Regulations other than r. 1 and 2: 27 Aug 2022 (see r. 2(b))

Road Traffic (Vehicles) Amendment Regulations (No. 2) 2022	SL 2022/174
	21 Oct 2022
		r. 1 and 2: 21 Oct 2022 (see r. 2(a));
		r. 3, 5, 13(4) and 15-20: 7 Nov 2022 (see r. 2(b));
		Regulations other than r. 1-3, 5, 13(4) and 15-20: 7 Nov 2023 (see r. 2(c))

Transport Regulations Amendment (Fees and Charges) Regulations 2023 Pt. 8 [12]	SL 2023/45 19 May 2023	20 May 2023 (see r. 2(b))
Transport Regulations Amendment (Fees and Charges) Regulations (No. 2) 2023 Pt. 3	SL 2023/43 19 May 2023	1 Jul 2023 (see r. 2(b))
Transport Regulations Amendment (Fees and Charges) Regulations 2024 Pt. 4 [13]	SL 2024/58 1 May 2024	Pt. 4 (other than Div. 3): 2 May 2024 (see r. 2(b)); Pt. 4 Div. 3: 1 Jul 2024 (see r. 2(c))
Road Traffic (Vehicles) Amendment Regulations (No. 2) 2024	SL 2024/107 26 Jun 2024	r. 1 and 2: 26 Jun 2024 (see r. 2(a)) Regulations other than r. 1 and 2: 27 Jun 2024 (see r. 2(b))
Road Traffic (Vehicles) Amendment Regulations (No. 3) 2024	SL 2024/180 4 Sep 2024	r. 1 and 2: 4 Sep 2024 (see r. 2(a)) Regulations other than r. 1 and 2: 5 Sep 2024 (see r. 2(b))

Citation	Published	Commencement
Road Traffic (Vehicles) Amendment Regulations (No. 6) 2024	SL 2024/256 11 Dec 2024	r. 1 and 2: 11 Dec 2024 (see r. 2(a)); Regulations other than r. 1 and 2: 1 Jan 2025 (see r. 2(b))
Road Traffic (Vehicles) Amendment Regulations 2025	SL 2025/4 8 Jan 2025	r. 1 and 2: 8 Jan 2025 (see r. 2(a)); Regulations other than r. 1 and 2: 10 Jan 2025 (see r. 2(b))
Transport Regulations Amendment (Heavy Vehicle) Regulations 2025 Pt. 3	SL 2025/20 22 Jan 2025	23 Jan 2025 (see r. 2(b))
Transport Regulations Amendment (Fees and Charges) Regulations 2025 Pt. 4 [14]	SL 2025/65 30 Apr 2025	Pt. 4 (other than Div. 3): 1 May 2025 (see r. 2(b)); Pt. 4 Div. 3: 1 Jul 2025 (see r. 2(c))
Road Traffic (Vehicles) Amendment Regulations (No. 4) 2025	SL 2025/164 17 Sep 2025	r. 1 and 2: 17 Sep 2025 (see r. 2(a)); Regulations other than r. 1 and 2: 1 Jan 2026 (see r. 2(b))
Transport Regulations Amendment (Fees and Charges) Regulations 2026 Pt. 3 [15]	SL 2026/63 13 May 2026	Pt. 3 (other than Div. 3): 14 May 2026 (see r. 2(b)); Pt. 3 Div. 3: 1 Jul 2026 (see r. 2(c))
Road Traffic (Vehicles) Amendment Regulations (No. 2) 2026	SL 2026/188 2 Sep 2026	r. 1 and 2: 2 Sep 2026 (see r. 2(a)); Regulations other than r. 1 and 2: 4 Sep 2026 (see r. 2(b))
Road Traffic (Vehicles) Amendment Regulations 2026	SL 2026/204 1 Oct 2026	r. 1 and 2: 1 Oct 2026 (see r. 2(a)); Regulations other than r. 1 and 2: 2 Oct 2026 (see r. 2(b))

Other notes

1 The *Road Traffic (Vehicles) Amendment Regulations (No. 2) 2017* r. 4(b) was disallowed by the Legislative Council on 27 Jun 2017 (see *Gazette* 30 Jun 2017 p. 3612).

2 The *Road Traffic (Vehicles) Amendment Regulations (No. 3) 2015* r. 2 and the *Road Traffic (Vehicles) Amendment Regulations (No. 5) 2015* r. 2 read as follows:

> **2. Specified day**
>
> For the purposes of section 18 of the Act, the specified day in relation to these regulations is 1 July 2015.

3 The *Transport Regulations Amendment (Fees and Charges) Regulations 2016* r. 9 reads as follows:

> **9. Specified day**
>
> For the purposes of section 18 of the Act, the specified day in relation to these regulations is 1 July 2016.

4 The *Road Traffic (Vehicles) Amendment Regulations (No. 2) 2017* r. 2 reads as follows:

> **2. Specified day**
>
> For the purposes of section 18 of the Act, the specified day in relation to these regulations is 1 July 2017.

5 The *Transport Regulations Amendment (Fees and Charges) Regulations 2017* r. 12 reads as follows:

> **12. Specified day**
>
> For the purposes of section 18 of the Act, the specified day in relation to these regulations is 1 July 2017.

6 The *Transport Regulations Amendment (Fees and Charges) Regulations 2018* r. 14 reads as follows:

14. Specified day

For the purposes of section 18 of the Act, the specified day in relation to these regulations is 1 July 2018.

7 The *Transport Regulations Amendment (Fees and Charges) Regulations 2019* r. 6 reads as follows:

6. Specified day

For the purposes of the *Road Traffic (Vehicles) Act 2012* section 18, the specified day in relation to this Division is 1 July 2019.

8 The *Road Traffic (Vehicles) Amendment Regulations (No. 3) 2020* r. 4 reads as follows:

4. Specified day

For the purposes of the *Road Traffic (Vehicles) Act 2012* section 18, the specified day in relation to these regulations is 10 July 2020.

9 The *Road Traffic (Vehicles) Amendment Regulations (No. 6) 2021* r. 4 reads as follows:

4. Specified day

For the purposes of the *Road Traffic (Vehicles) Act 2012* section 18, the specified day in relation to these regulations is 1 July 2021.

10 The *Road Traffic (Vehicles) Amendment Regulations (No. 3) 2022* r. 4 reads as follows:

4. Specified day

For the purposes of section 18 of the Act, the specified day in relation to these regulations is 1 July 2022.

[11] The *Road Traffic (Vehicles) Amendment Regulations (No. 4) 2022* r. 4 reads as follows:

> **4. Specified day**
>
> For the purposes of section 18 of the Act, the specified day in relation to regulations 8 and 9 is 27 September 2022.

[12] The *Transport Regulations Amendment (Fees and Charges) Regulations 2023* r. 26 reads as follows:

> **26. Specified day**
>
> For the purposes of section 18 of the Act, the specified day in relation to this Part is 1 July 2023.

[13] The *Transport Regulations Amendment (Fees and Charges) Regulations 2024* r. 11 reads as follows:

> **11. Specified day**
>
> For the purposes of the *Road Traffic (Vehicles) Act 2012* section 18, the specified day in relation to this Division is 1 July 2024.

[14] The *Transport Regulations Amendment (Fees and Charges) Regulations 2025* r. 9 reads as follows:

> **9. Specified day**
>
> For the purposes of the *Road Traffic (Vehicles) Act 2012* section 18, the specified day in relation to this Division is 1 July 2025.

15 The *Transport Regulations Amendment (Fees and Charges) Regulations 2026* r. 6 reads as follows:

6. Specified day

For the purposes of the *Road Traffic (Vehicles) Act 2012* section 18, the specified day in relation to this Division is 1 July 2026.

© State of Western Australia 2026.
This work is licensed under a Creative Commons Attribution 4.0 International Licence (CC BY 4.0).
To view relevant information and for a link to a copy of the licence, visit www.legislation.wa.gov.au.
Attribute work as: © State of Western Australia 2026.
By Authority: ANDREW JONES, Government Printer